TABLE-14: LIST OF STORAGE AND DAMS SHOWING SIGNIFICANT LOSS OF DATA FROM DAMS MONITORING ORGANIZATION, LAHORE-PAKISTAN REGISTER OF DAMS (JULY 1980)

Sr. No.	Name of Storage	Year of construction	Location: Province	Location: City	Location: River	Capacity A.Feet	F.W.S area in summer sq. miles	Summer Loss in Cs. p.s.m.	Total loss in summer Cs.	F.W.S area in winter in sq. miles	Winter Loss inch/C per sq. mile.	Total Loss in Winter, Cusecs.	Annual loss by evaporation, Cuseqs.
1	Warsak	1960	NWFP	Peshawar	Kabul	20,000	5.7	38/5.6	31.92	5.3	15/2.21	11.1	43.0
2	Baran	1961	"	Bannu	Kurrum	98,000	3.0	45/6.63	19.90	3.0	20/2.95	8.85	28.8
3	Tanda	1967	"	Kohat	Kohat Tai	78,400	5.0	48/7.072	35.36	5.0	20/2.95	14.75	50.1
4	Tarbela	1976	"	Haripur	Indus	11,100,000	93.75	45/6.63	621.6	50.0	20/2.95	147.5	769.1
5	Khanpur	Incomplete.	"	Taxila	Haro	106,000	25.0	48/7.072	176.8	20.0	20/2.95	59.0	236.2
6	Namel	1913	Pb.	Mianwali	Golor Nullah	22,364	3.0	50/7.37	22.11	2.0	20/2.98	5.9	28.0
7	Rawal	1962	"	RWP	Kurang	47,500	3.5	42/6.19	21.7	3.0	17/2.50	7.50	29.2
8	Mangla	1967	"	Jhelum	Jhelum	5,880,000	117.2	44/6.48	759.5	40.0	20/2.95	118.0	877.5
9	Chashma	1971	"	M/wali	Indus	500,000	20.0	50/7.37	147.4	10.0	20/2.90	29.5	177.0
10	Simly	Incomp.	"	RWP	Soan	28,750	5.0	42/6.19	31.0	4.0	17/2.51	10.0	41.0
11	Spin Kariz	1945	Baluchistan	Quetta.	Nar & Murdar	5,475	3.0	60/8.84	26.5	2.0	25/3.60	7.38	34.1
12	Nari Bolan	1958	"	Bhodar.	Bolan	73,000	5.0	65/9.58	47.9	4.0	30/4.43	17.7	65.6
13	Wali Tangi	1961	"	Quetta.	Wali Tangi	413	3.0	60/8.86	26.6	2.0	25/3.69	7.38	33.8
14	Hub	1979	Sind	Kcy.	Hub	8,57,000	38.0	65/9.58	364.8	20.0	45/6.65	133.0	497.6
15	Khushdil Khan	1890	Baluchistan	Pishin.	Surkhab & Tir Murgha	23,800 ~~(1890)~~ 8,500 (present)	3.0	50/7.39	22.3	2.0	30/4.43	8.86	31.06
												Total	2940.6

TABLE-15

SMALL DAMS CONSTRUCTED IN BARANI AREA. AN ESTIMATE OF LOSS BY EVAPORATION

S. No	Name of Dam	Location	Year of completion	C.C.A acres	Total storage A.ft.	FWS area in summer, sq. miles	Evap. in inch. for 4 summer months	Total Evap. in Cs. during 4 summer months	Evap. in inch. for 4 winter months	Total Evap. in Cs. during 4 winter months	Total Evap. Loss during 8 months of a year in Cusecs.
1	Misriot	R/pindi.	1963	100	513	0.5	33.3	3.68	13.3	1.45	5.13
2	Spiala	Attock	1964	140	568	0.5	"	3.68	"	1.45	5.13
3	Bango	Attock	1965	75	161	0.25	"	1.84	"	0.73	2.57
4	Gurabh	Attock	1966	500	830	0.75	"	5.52	"	2.18	7.7
5	Ratti Kissa	"	1970	650	1660	1.0	"	7.35	"	2.91	10.26
6	Narali	R/pindi	1970	250	682	0.75	"	5.52	"	2.18	7.7
7	Dangi	"	1971	350	1760	1.0	"	7.35	"	2.91	10.26
8	Dhok Dahlian	Jhelum	1971	750	1419	1.0	"	7.35	"	2.91	10.26
9	Dhurnal	Attock	1971	300	1625	1.0	"	7.35	"	2.91	10.26
10	Qibla Bandi	"	1971	850	1820	1.0	"	7.35	"	2.91	10.26
11	Kanjoor	"	1978	2500	2824	2.0	"	14.70	"	5.82	20.52
12	Ghansi Bar	"	1979	1500	1958	2.0	"	"	"	"	"
13	Khokhar Zai	Jhelum	1979	1200	3312	2.0	"	"	"	"	"
						(235)			Total (for 8 months)		210.35

TABLE-16: AN ESTIMATE OF EVAPORATION LOSS FROM LAKES IN SIND

Sr. No.	Name of Lake	Province.	Important city close-by	FWS Area in Sq. Mile	FWS Evap. in inches/Cus.per sq.mile summer	Total in Cs. summer	FWS Area in winter sq. mile	FWS Evap. in cusecs per sq. mile	Total Loss in Winter (Cs.)	Total per year loss (Cusecs)
1	Manchher	Sind	Sehwan	90	90/13.26	1193.4	80	40/5.9	471.5	1665
2	Kalri	Sind	Ghero	60	65/9.58	574.6	45	40/5.9	265.2	840.0
3	Other Lakes	Sind	Ghero	10	65/9.58	95.8	5	40/5.9	29.5	125.3
									Grand Total:	2630.3

TABLE-17: ESTIMATED EVAPORATION LOSS FROM PONDS IN VILLAGES.AREA OF EACH POND ASSUMED EQUAL TO 2 ACRES.

Sr. No.	Province	District	Mouzas Nos.	Total acres at 2 ac. per village	F.W.S.E during summer 6 months (inch)	Total Ev. during summer 6 months in ac.ft.	Winter 6 months evapo. in inch.	F.W.S.E in Winter 6 months in ac.ft. for all villages	Total Annual F.W.S.E. in ac.ft.
1	N.W.F.P	Peshawar	640	1280	40	4267	15	1600.0	5867
2	"	Hazara	1152	2304	45	8640	15	2880.0	11520
3	"	Mardan	327	654	45	2452	15	817.5	3270
4	"	Kohat	298	596	48	2384	20	993.0	3377
5	"	Bannu	388	776	45	2910	20	1567.0	5875
6	"	D.I.Khan	470	940	55	4308	20	1567.0	5875
7	Punjab	Campbellpur (Attock)	553	1106	50	4608	20	1843	6451
8	"	Rawalpindi	1368	2736	45	10260	20	4560	14820
9	"	Jhelum	955	1910	45	7163	20	3183	10346
10	"	Gujrat	1532	3064	45	11490	15	3830	15320
11	"	Mianwali	730	1460	50	6083	20	2433	8516
12	"	Sargodha	1167	2334	50	9725	20	3890	13615
13	"	Jhang	1065	2130	50	8875	20	3550	12425
14	"	Faisalabad	1381	2762	48	11048	20	4603	15651
15	"	Sialkot	2967	5934	40	19780	15	7418	27198
16	"	Lahore	1022	2044	40	6813	20	3407	10220
17	"	Gujranwala	1257	2514	40	8380	15	3143	11523
18	"	Sheikhupura	1097	2184	45	8228	20	3657	11885
19	"	Sahiwal	2156	4312	50	17967	20	7187	25154
20	"	Multan	2286	4572	50	19050	20	7620	26670

(continued)

TABLE-17 (continued)

1	2	3	4	5	6	7	8	9	10
21	"	Muzafargarh	1667	3334	50	13892	20	5557	19449
22	"	D.G. Khan	874	1748	55	8012.0	20	2913	10925
23	"	Bahawalpur	696	1392	60	6960.0	25	2900	9860
24	"	Rahim Yar Khan	1148	2296	60	11480.0	20	3827	15307
25	"	Bahawalnagar	1086	2172	50	9050.0	20	3620	12670
26	Sind	Hyderabad	928	1856	60	9280.0	30	4640	13920
27	"	Thatta	669	1338	55	6133.0	40	4460	10593.0
28	"	Sanghar	416	832	55	3813.3	25	1733	5546
29	"	Dadu	474	948	90	7110.0	30	2370	9480
30	"	Mirpur Khas	770	1540	60	7700.0	35	4492	12192
31	"	Khairpur	396	792	55	3630.0	25	1650	5280
32	"	Nawab Shah	543	1086	65	5882.5	25	2262.5	8145
33	"	Sukkur	789	1578	60	7890.0	25	3288	11178
34	"	Larkana	467	934	70	5448.3	30	2335	7783
35	"	Jacobabad	364	728	60	3640.0	30	1820	5460
36	"	Karachi	91	182	65	986.0	35	531	1517
37	Baluch-istan.	Quetta	551	1102	65	5969.0	30	2755	8724
38	"	Sibi	823	1646	80	10973.0	30	4115	15088
39	"	Loralai	532	1064	60	5320	25	2217	7537
40	"	Chaghi	93	186	60	930.0	30	465	1395
41	"	Zhob	368	736					
42	"	Lasbela	303	606	70	3505	35	1767	5302.5
43	"	Mekran	868	1736	60	8680	35	5063	13743
44	"	Kharan	426	852	70	5041	35	2485	7526
45	"	Kalat	1826	3652	70	21303.3	30	9130	30433
46	"	Kachi	1264	2528	80	16853.3	30	6320	23173

TABLE-20 AN ESTIMATE OF LOSS BY EVAPORATION FROM PONDS UPSTREAM OF BARRAGE

Sr. No.	River	Name of Barrage	Barrage Width, ft.	U/S Guide Bank Length ft.	Marginal Bunds average Length (ft) Left	Marginal Bunds average Length (ft) Right	Flood area U/s of Barrage during 4 summer months sq.miles	F.W.S.E. in summer 4 months inches/ cus.P.Sq. m.	Total loss in Cs. in 4 summer months	Ponded area during 6 winter months sq.mile	F.W.S.E in winter six months inches/ Cs. P.Sq. m.	Total loss by Evop. in Cs. from ponds in winter	Total loss from H/works as evop in Cusecs
1	Sutlej	Sulei-manki.	2223	3500	47500	63000	15	30/6.61	99.1	5	25/3.69	18.5	118.0
2	Sutlej	Islam	1621	3380	50000	67000	23	33.3/7.34	168.8	7	20/2.95	20.7	190.0
3	Sutlej	Mailsi	1601	3200	65000	55000	27	30/6.6	178.0	9	20/2.95	26.6	265
4	Ravi	Balloki	1646	1300	30000	30000	3.1	30/6.6	20.5	1.0	20/2.96	2.96	23.5
5	Chenab	Marala	4472	4124/3007	12.7 miles		15	27/6.0	89.3	5	15/2.22	11.1	100.4
6	Chenab	Khanki	4600	2700	21000	33500	90	27/60	540	30	15/2.22	66.6	606.6
7	Chenab	Qadar-abad	3373	4924	65000	105000	21.5	36/6.6	142	7	20/2.96	20.7	162.7
8	Chenab	Trimmu	3025	-	-	-	36	33.3/7.34	264	12	20/2.96	35.5	299.5
9	Chenab	Panjnad	3400	3613	65000	65000	15.0	33.3/7.34	110	5	20/2.96	14.8	124.8
10	Jhelum	Rasul	3209	3360/2021	15000	-	2.0	33.3/7.34	14.7	1	15/2.22	2.2	17
11	Indus	Chashma	3556	3669	-	-	4	33.3/7.34	29.4	2	20/2.96	5.9	35
12	Indus	Taunsa	4346	7269	135000	-	60	33.3/7.34	440	20	20/2.96	59.2	500
													2441.0 Cs. 1.78 A.ft.

TABLE-22 - Water-table upto 5.0 ft. depth by Canal Commanded during June 1978- compiled from Table 3.6 of Master Plan C.C.A with water-table between 0 - 5 ft.

S.No.	Canal Commands N.W.F.P.	C.C.A m.acres	Percent-age	Actual area in m. acres
1	Upper Swat	0.279	1	0.00279
1	Lower Swat	0.182	7	0.01274
3	Warsak	0.119	0	0.0
4.	Kabul	0.048	6	0.00288
5.	Paharpur	0.104	0	0.0
	Total	0.732	2.515	0.01841
	Sind and Baluchistan			
1	Pat	0.747	0	0.00
2	Desert	0.328	8	0.02624
3	Begari	1.002	5	0.0501
4	Ghotki	0.858	11	0.09438
5	North West	1.215	87	0.04671
6	Rice	0.519	9	0.04671
7	Dadu	0.584	22	0.12848
8	Khairpur	0.790	16	0.12640
9	Rohri	2.561	9	0.23049
10	Nara	2.176	21	0.45696
11	Kalri	0.592	21	0.06512
12	Lined Channel	0.502	30	0.15060
13	Phuleli	0.923) 0.758)	3	0.05043
	Total	13.555	18.32	2.48296
	Punjab			
1	Upper Dipalpur	0.36	1	0.0036
2	Ravi Syphon	0.649	3	0.01947
3	Ravi Branch	0.424	2	0.00848
4	Upper Chenab	1.017	4	0.04068
5	Marala Ravi Link	0.158	2	0.00316
6	Sadiqia	0.969	9	0.08721
7	Fordwah	0.426	41	0.17466
8	Pakpattan	1.049	0	0.0
9	Lower Dipalpur	0.615	2	0.0123

(continued)

P. No. 453

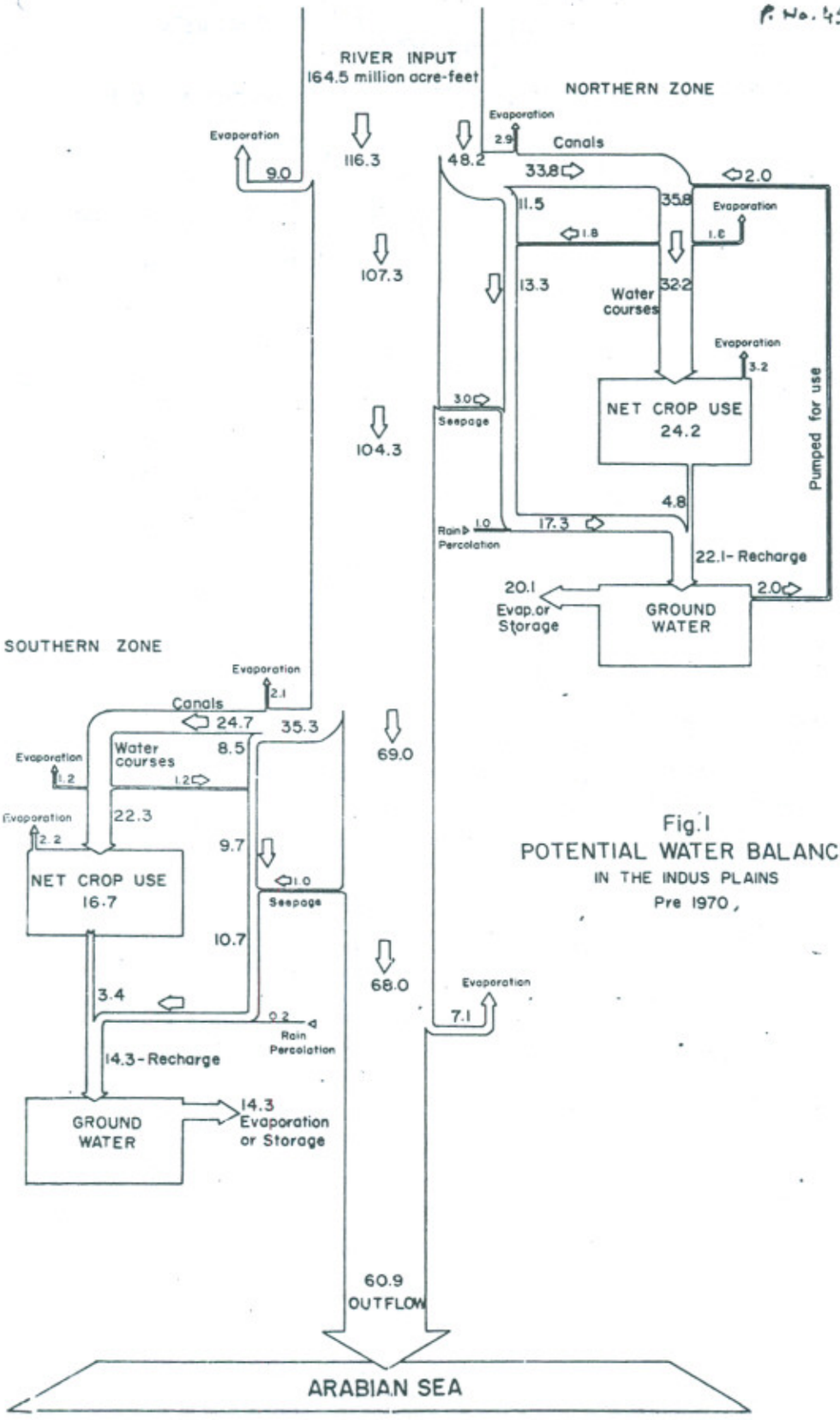

Fig. I
POTENTIAL WATER BALANCE
IN THE INDUS PLAINS
Pre 1970,

P. No. 453

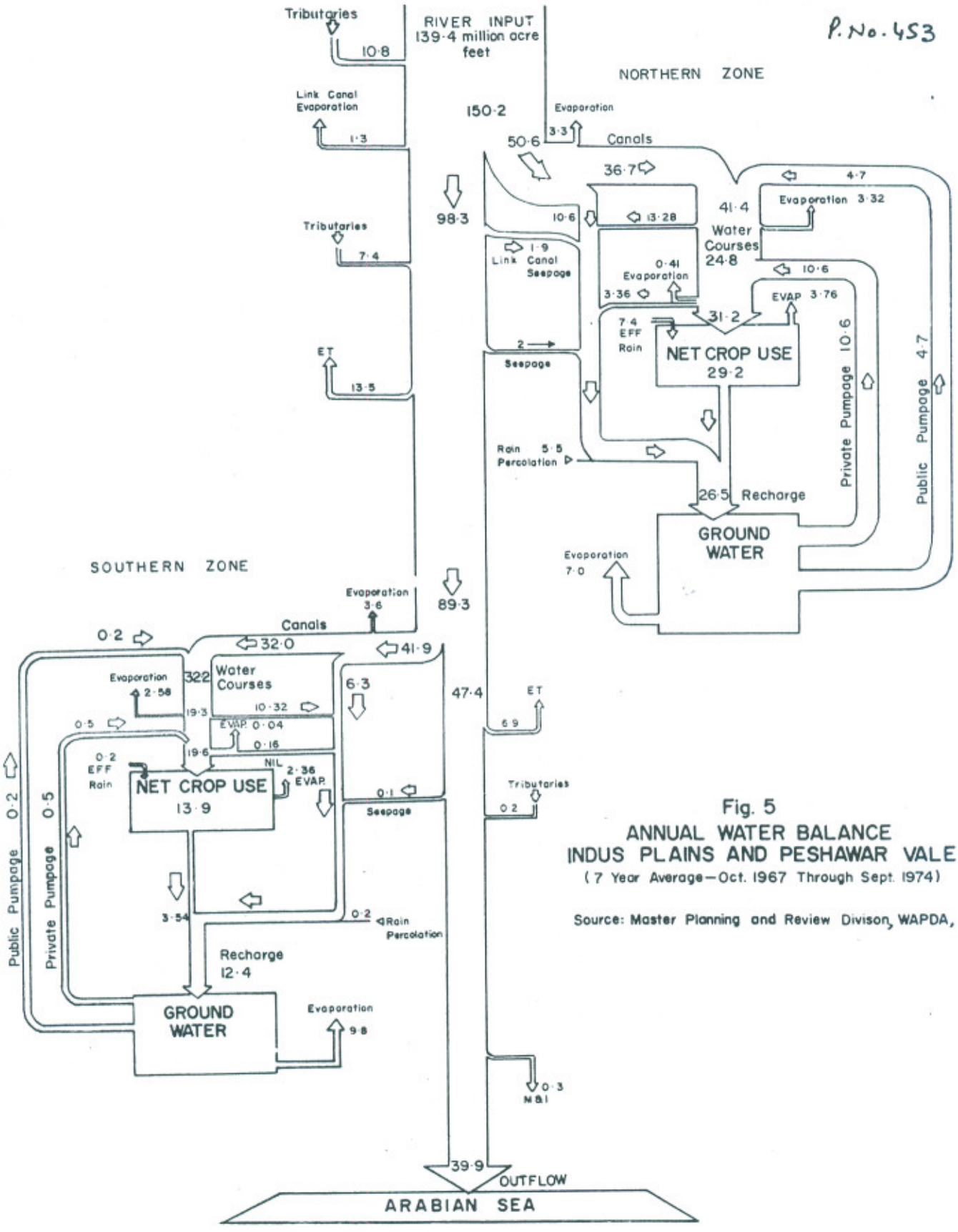

Fig. 5
ANNUAL WATER BALANCE
INDUS PLAINS AND PESHAWAR VALE
(7 Year Average—Oct. 1967 Through Sept. 1974)

Source: Master Planning and Review Divison, WAPDA,

N.W.F.P
F.W.S EVAPORATION
ANNUAL, SEASONAL AND MONTHLY

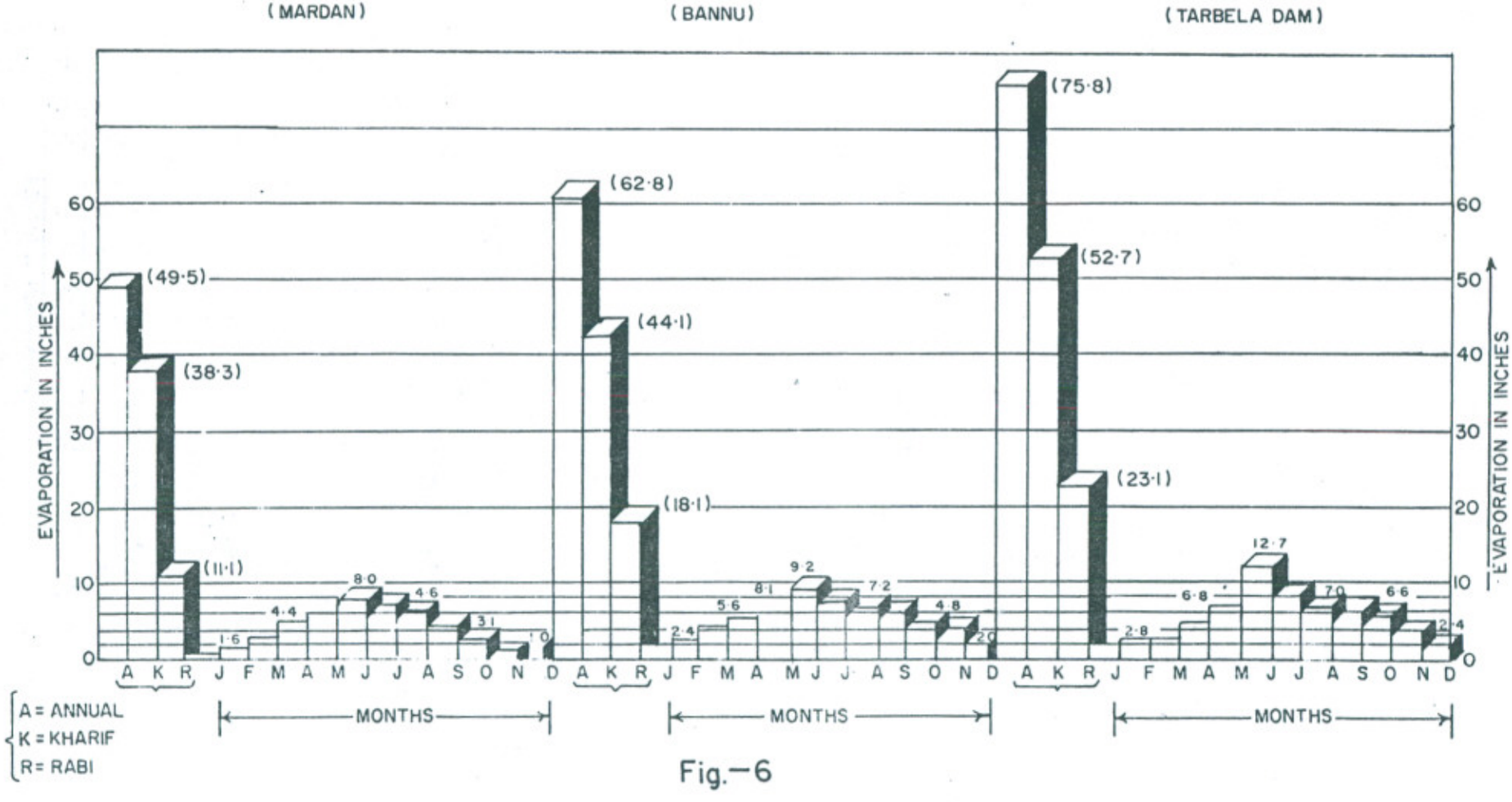

Fig.—6

PUNJAB
F.W.S EVAPORATION
ANNUAL, SEASONAL AND MONTHLY

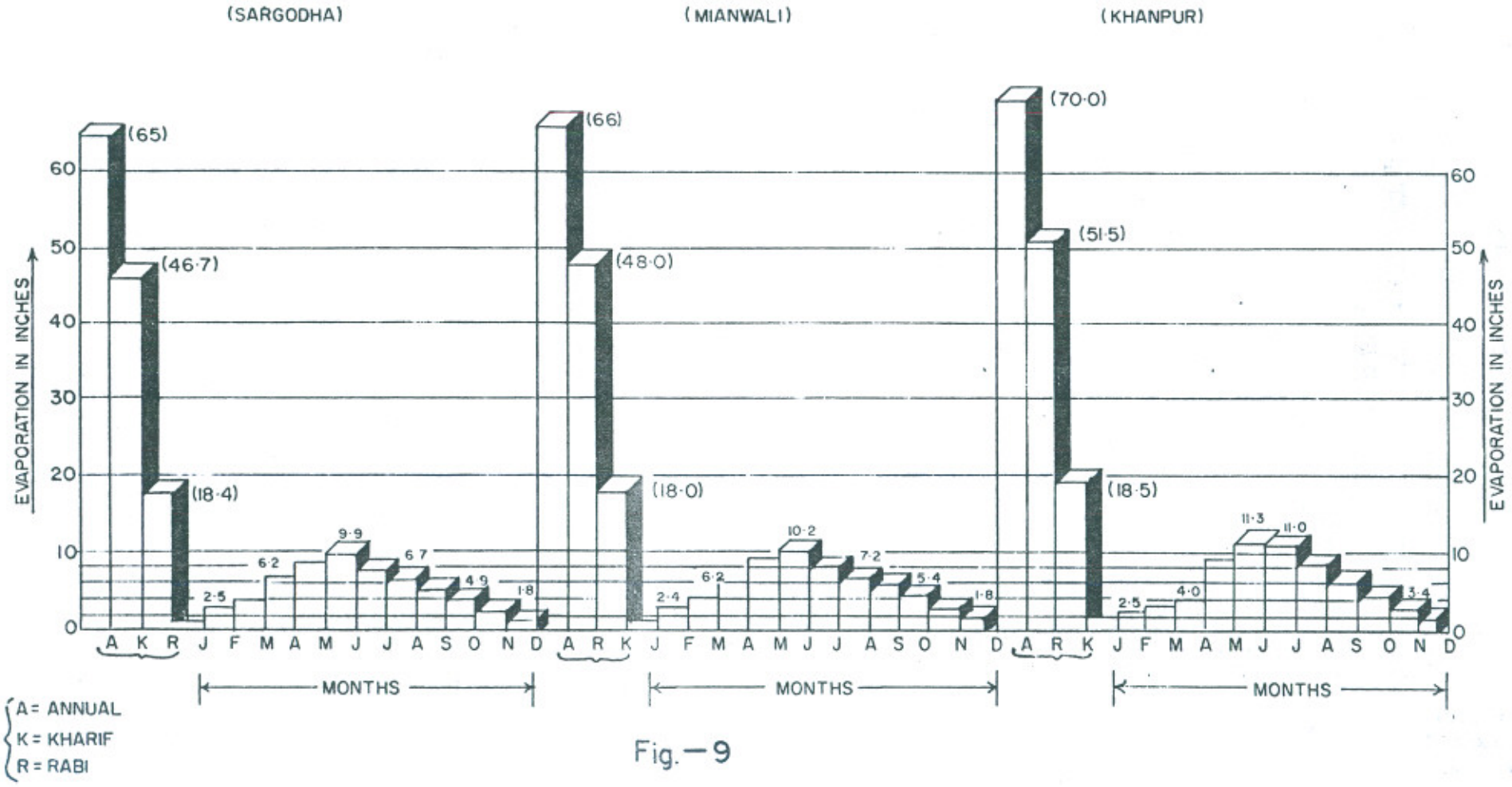

Fig.—9

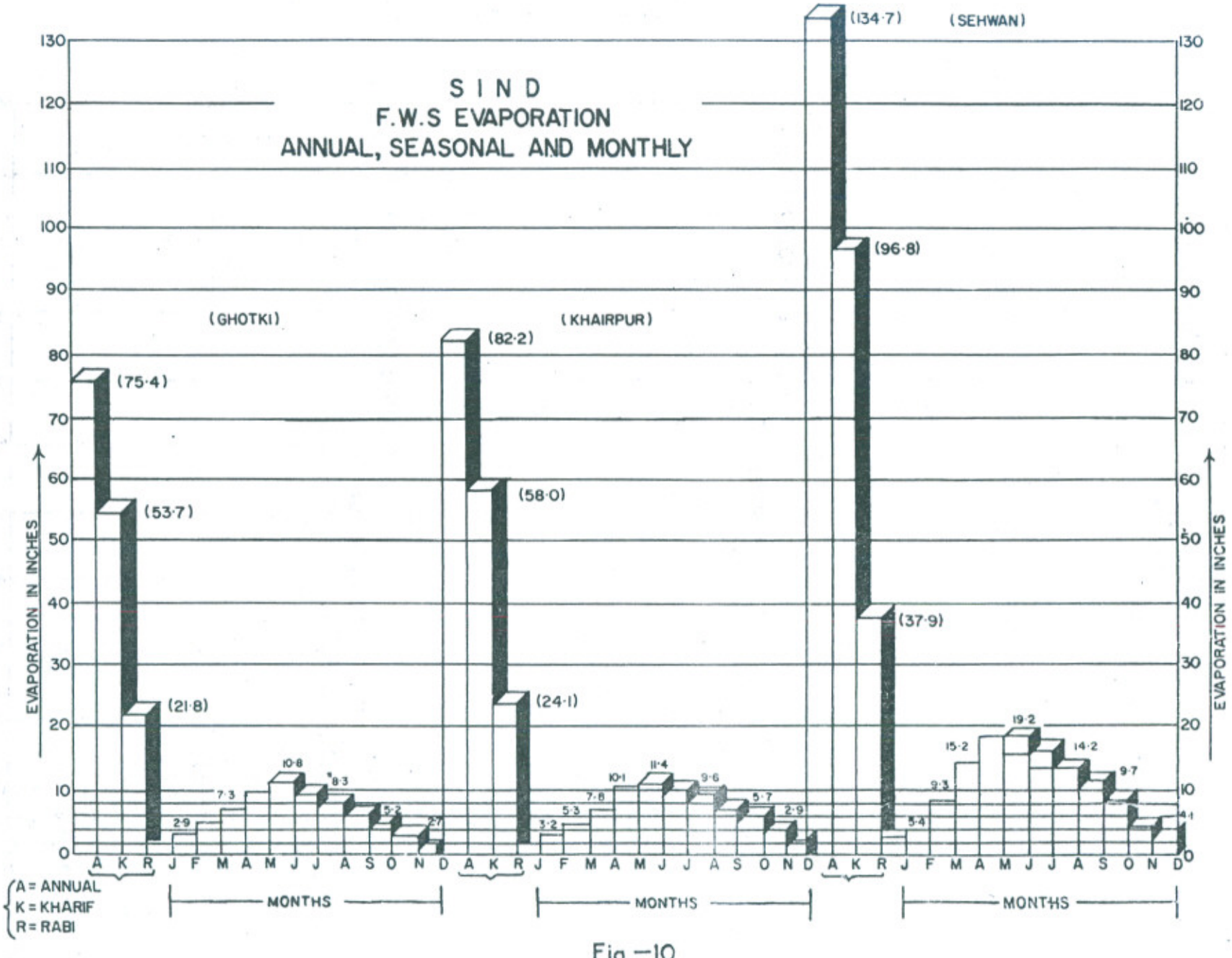
SIND
F.W.S EVAPORATION
ANNUAL, SEASONAL AND MONTHLY
(GHOTKI)
(KHAIRPUR)
(SEHWAN)
(75·4)
(53·7)
(21·8)
(82·2)
(58·0)
(24·1)
(134·7)
(96·8)
(37·9)
EVAPORATION IN INCHES
A K R J F M A M J J A S O N D
MONTHS
A = ANNUAL
K = KHARIF
R = RABI

Fig.—10

F.W.S EVAPORATION
ANNUAL, SEASONAL AND MONTHLY

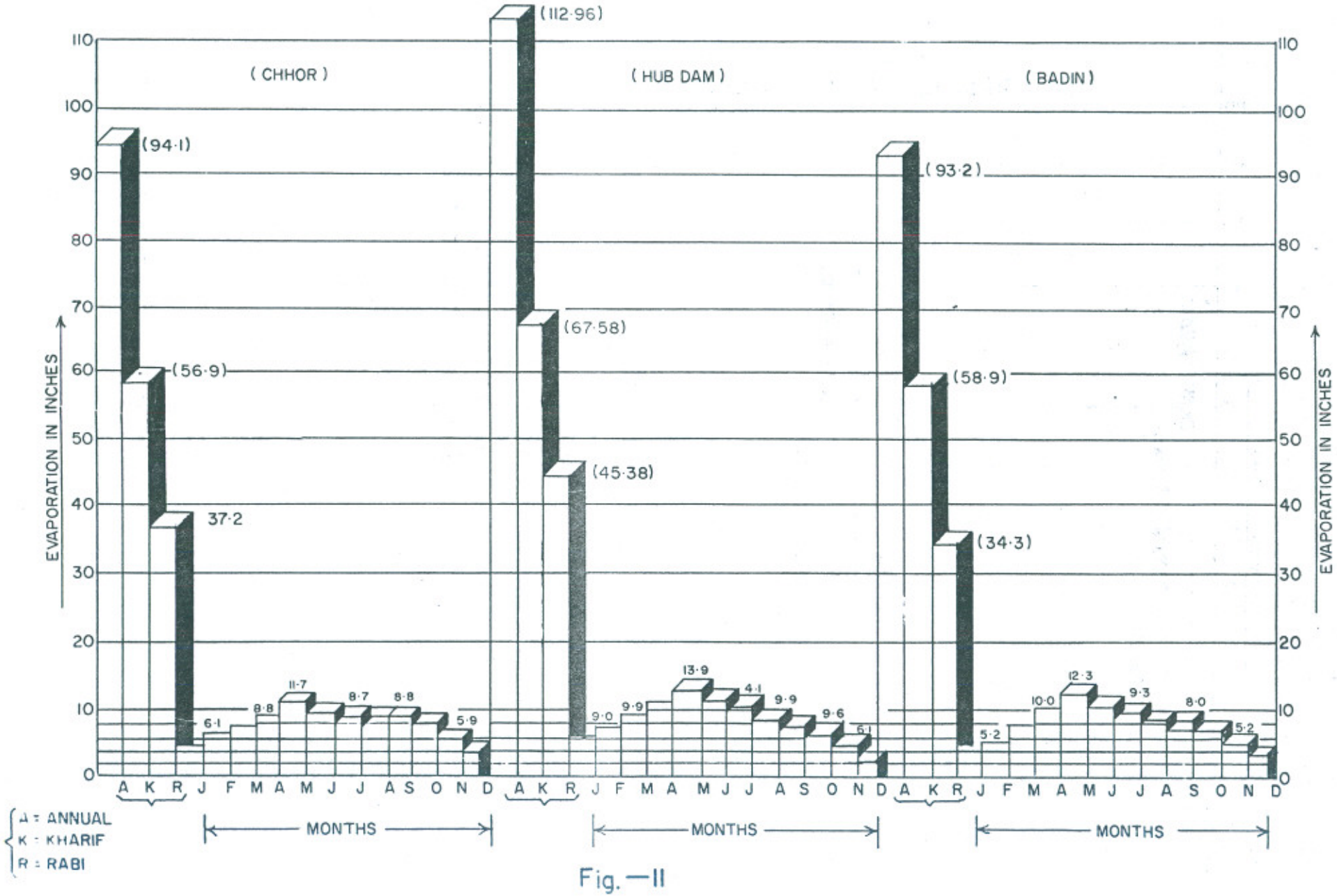

Fig.—II

BALUCHISTAN F.W.S EVAPORATION ANNUAL, SEASONAL AND MONTHLY

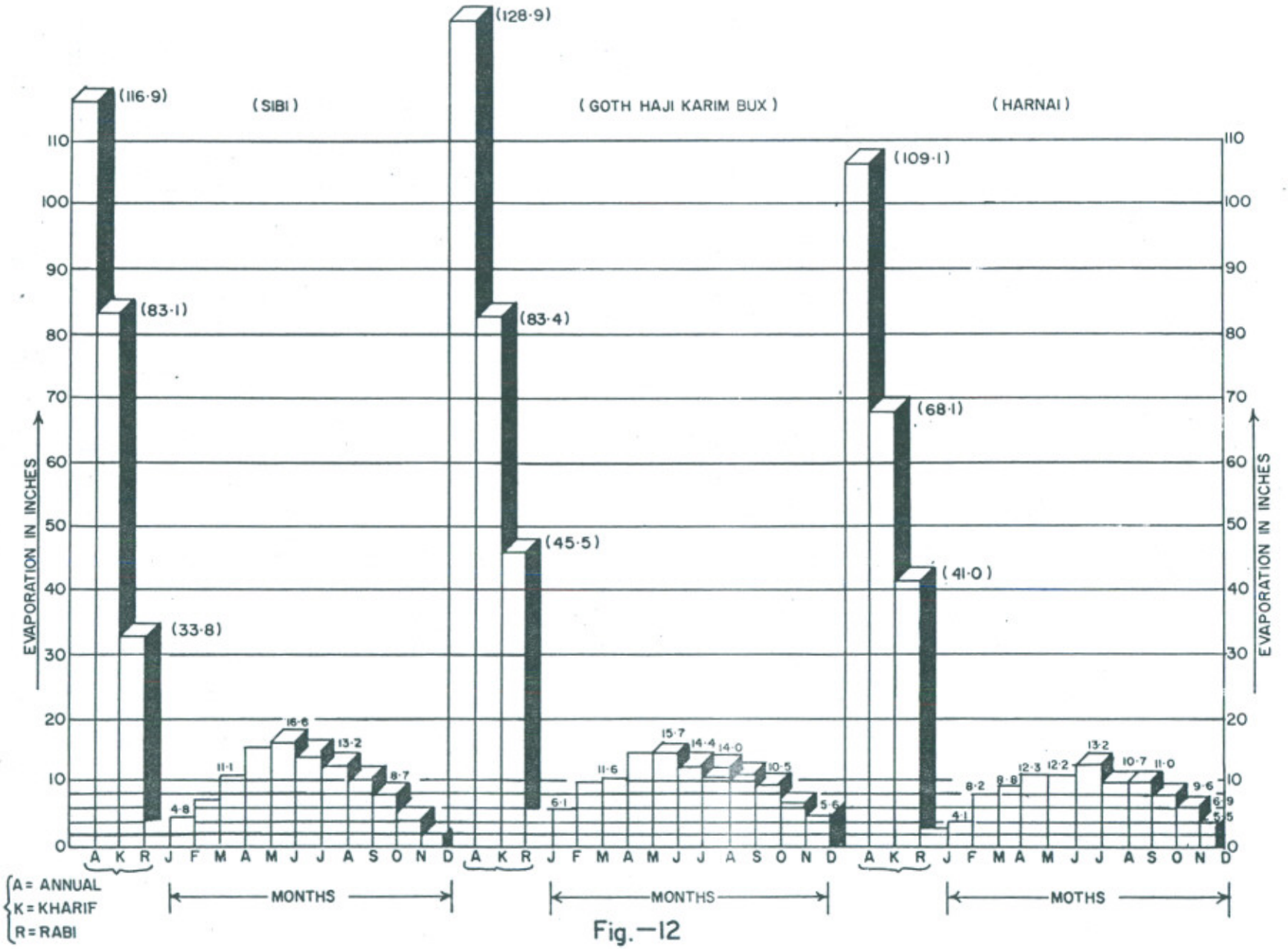

Fig.—12

Fig.12a – ANNUAL LAKE EVAPORATION

Fig.12b-LAKE EVAPORATION FROM APRIL TO SEPTEMBER

Fig.12c-LAKE EVAPORATION FROM OCTOBER TO MARCH

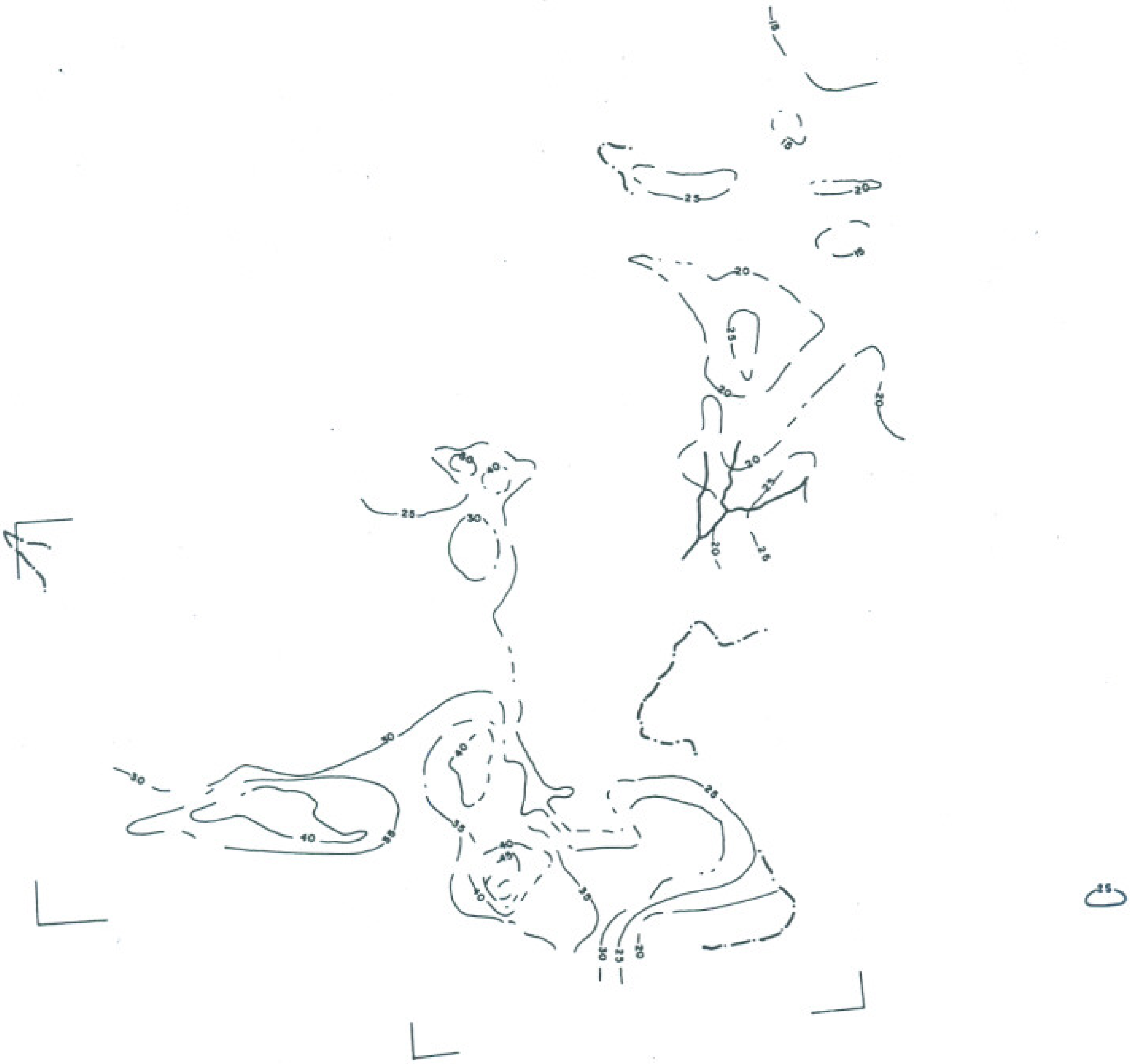

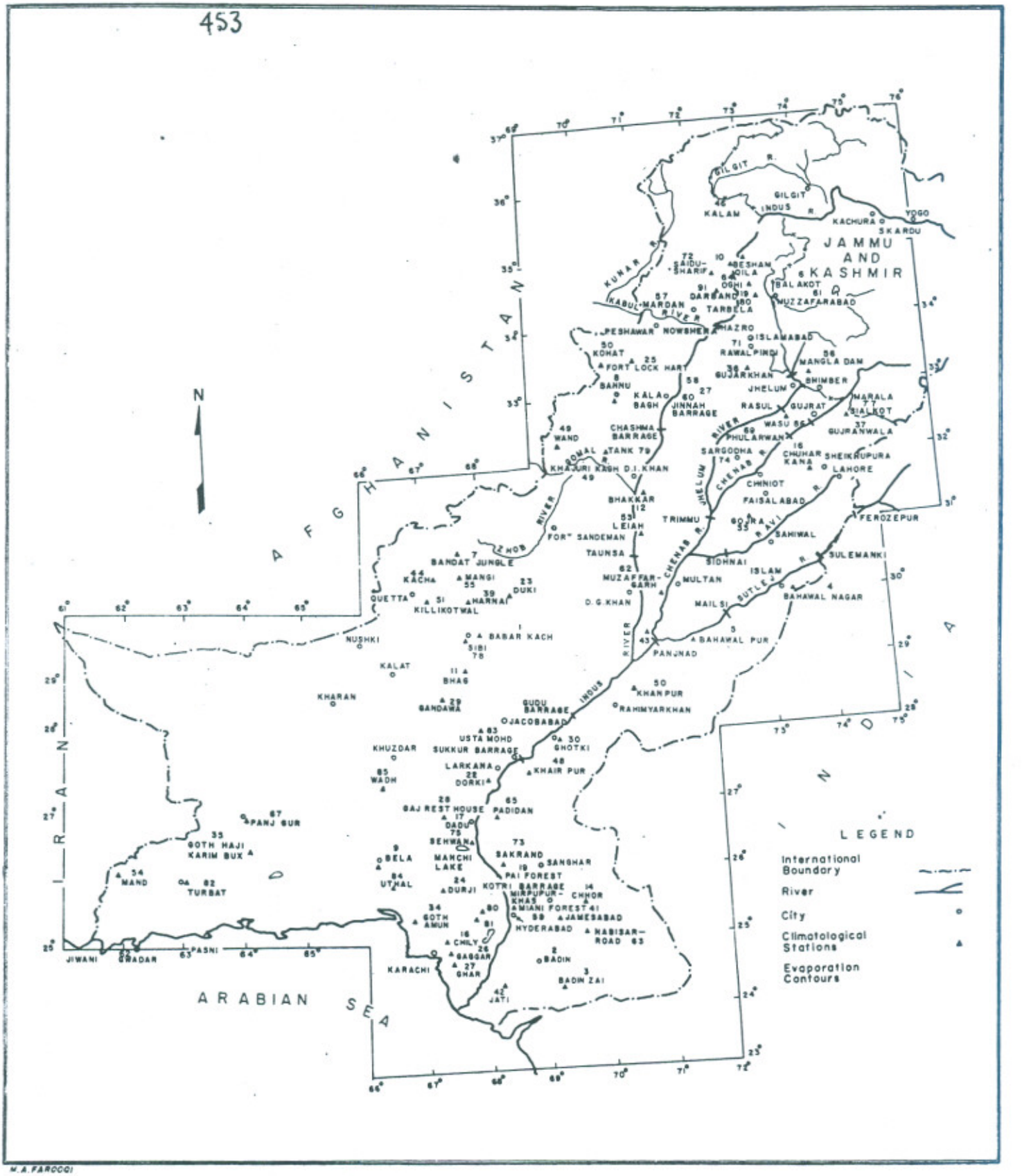
N
AFGHANISTAN
IRAN
INDIA
ARABIAN SEA
JAMMU AND KASHMIR
GILGIT
INDUS R.
KALAM
KACHURA
SKARDU
YOGO
KUNAR R.
KABUL-MARDAN RIVER
PESHAWAR
NOWSHERA
HAZRO
ISLAMABAD
RAWALPINDI
KOHAT
FORT LOCK HART
SAHNU
KALABAGH
JINNAH BARRAGE
GUJARKHAN
JHELUM
BHIMBER
MANGLA DAM
MARALA
SIALKOT
GUJRANWALA
RASUL
GUJRAT
WASU
PHULARWAN
CHASHMA BARRAGE
WAND
TANK
D.I.KHAN
KHAJURI KACH
SOMAL R.
ZHOB RIVER
SARGODHA
CHUHAR KANA
SHEIKHUPURA
LAHORE
CHINIOT
FAISALABAD
BHAKKAR
LEIAH
TRIMMU
RAVI R.
FEROZEPUR
SAHIWAL
FORT SANDEMAN
TAUNSA
SIDHNAI
ISLAM
SULEMANKI
BANDAT JUNGLE
KACHA
MANGI
DUKI
MUZAFFAR-GARH
MULTAN
QUETTA
KILLIKOTWAL
HARNAI
D.G.KHAN
MAILSI
BAHAWAL NAGAR
NUSHKI
BABAR KACH
SIBI
BAHAWAL PUR
PANJNAD
KALAT
BHAG
KHARAN
BANDAWA
GUDU BARRAGE
KHAN PUR
RAHIMYARKHAN
JACOBABAD
USTA MOHD
SUKKUR BARRAGE
GHOTKI
KHUZDAR
LARKANA
DORKI
KHAIR PUR
WADH
DAJ REST HOUSE
PADIDAN
PANJ GUR
DADU
SEHWAN
GOTH HAJI KARIM BUX
BELA
MANCHI LAKE
SAKRAND
SANGHAR
MAND
TURBAT
UTAL
DURJI
PAI FOREST
KOTRI BARRAGE
MIRPUR-KHAS
CHHOR
AMIANI FOREST
GOTH AMUN
JAMESABAD
HYDERABAD
NABISAR-ROAD
CHILY
GAGGAR
GHAR
BADIN
BADIN ZAI
KARACHI
JATI
JIWANI
GWADAR
PASNI
LEGEND
International Boundary
River
City
Climatological Stations
Evaporation Contours

M.A. FAROOQI