PAPER No. 260

LINING OF CHANNELS

By K. B. S. I. Mahbub, I.S.E.

General

This subject has been engaging the earnest attention of Engineers since a long time, and a paper dealing with it was first presented to the Punjab Engineering Congress in 1917. A lot of water has flowed under our bridges since and with the march of time, there has been considerable advance in the theory as well as the construction methods. The present position with regard to lining schemes, however, remains very much the same and can be summed up in the words used by Mr. Curry in 1917*. "At the time the present war broke out, controversy was raging high regarding the most efficacious method of preventing absorption losses. Since then, however, owing to the retrenchment of expenditure, further experiments and progress in this direction have been held somewhat in abeyance."

Two major lining schemes have, however, since been completed *viz.*, lining Gang Canal with 6" lime concrete using kankar as an aggregate in a length of 84 miles, and brick lining of the Haveli Main Line in a length of 45 miles. Lining has also been done in an experimental one-mile reach of Hassuwali Distributary and the lining of Jhang Branch R. D. 32,000—37,000, and a few odd distributaries is at present in hand. Several lining schemes had, however, to be shelved on account of the war.

Advantages of Lining

The main advantages of lining are :—

(*a*) The saving of water which can be used for extension of irrigation or increasing the water-supply in areas already served.

(*b*) The preventing of water reaching the water-table and raising it, thus avoiding waterlogging.

(*c*) The improvement of command owing to the flatter slopes possible.

It may thus be worth while in some cases to line only

*Lining Irrigation Channels by T. A. Curry, Punjab Engineering Congress, Paper No. 32.

the head reach of a distributary, so as to command the adjoining high areas and leave the channel unlined in the lower reaches, where the command is ample.

(*d*) The stability of section, which in the case of distributaries should reduce remodelling and alteration of outlets.

(*e*) Reduction in maintenance costs.

Financial Aspect of Lining

The losses in any channel are less in the Rabi than in the Kharif owing to less depths run, lower temperature and reduced evaporation. It has thus to be considered if the saving due to lining during Rabi would be sufficient to irrigate an area allotted on the basis of Kharif savings. The Rabi time factor is very much less than that for Kharif and their proportion may be taken the same as the proportion of absorption losses, for all practical purposes.

On the Lower Chenab Canal for example, the average capacity factor for the period 1939-40 is 0.68 for Rabi and 0.83 for Kharif. The average Rabi time factor for the absorption losses, as calculated by Mr. Crump in his report on the Project Estimate for lining the Lower Chenab Canal channels, is 70 for the upper portion of the Lower Chenab Canal and 56 for the lower portions. The time factor is thus sufficient in the upper reaches and somewhat low in the lower reaches. It would thus be good enough if the Rabi time factor is provided for in considering if we can obtain sufficient Rabi water for a cusec capacity at a reasonable cost.

The value of a cusec of capacity ranges in the various Divisions from Rs. 500 to 700 in Rabi, and Rs. 400 to 700 in Kharif. The average value may thus be considered as Rs. 600 and 550 respectively, or Rs. 1,150 in all. These rates are based on direct receipts only, and the land revenue based on the Lower Chenab Canal figures for 1938-39 would be about 57 per cent extra, *i. e.*, Rs. 650. The total average value of a cusec of capacity may thus be taken as Rs. 1,800. We could thus get a return of $4\frac{1}{2}$ per cent if the expenditure incurred to ensure a saving of one cusec of capacity is Rs. 40,000, in cases where water is supplied to areas already served.

This is based on the presumption that the areas irrigated would increase proportionately with the increase in supply. It is common knowledge that the area irrigated does not fluctuate appreciably with variations in supply from year to year. This argument, however, would not apply in this case,

as here we shall have to deal with a permanent variation which would be constant for all times. This can be easily corroborated from the relation between mean Rabi supplies and actual intensities on different canals, which are as follows :—

Canal.	Rabi Mean Supply.	Rabi Intensity.	Duty.
Western Jumna Canal	1·1	20·6	188
Sirhind Canal	1·4	32·8	233
Upper Bari Doab Canal	1·6	47·0	305
Lower Jhelum Canal	1·8	44·0	247
Lower Bari Doab Canal	2·2	42·0	187
Lower Chenab Canal	2·4	63·0	264

The agreement is not exact as the areas irrigated are appreciably affected by such factors as rainfall and quality of the land. These figures, however, do indicate that the area irrigated is roughly proportional to the supply, omitting the Lower Bari Doab Canal and Upper Bari Doab Canal, one of which is particularly unfavourably, and the other particularly favourably situated.

In cases where supplies are allotted to new areas, the return can be calculated with greater accuracy, after taking into account the designed intensity, average water rate and working expenses.

In cases, however, where water is supplied to Crown waste areas, we are entitled to credit for the interest on proceeds of sales. One cusec of capacity will suffice for about 350 acres of Crown waste which even at Rs. 200 per acre would fetch Rs. 70,000. The interest on this at 3 per cent would be Rs. 2,100 bringing the value of a cusec of capacity to Rs. 3,900, and the return on the basis of an expenditure of Rs. 40,000 to 9·8 per cent.

No allowance has been made in the above for the increased cost of civil administration and the existing revenue from Crown waste, as it must be small.

If the area is given out on temporary cultivation, the indirect receipts inclusive of land revenue would be about Rs. 8 per acre, per season. With a 75 per cent intensity and a Kharif Full Supply Factor of 88, it should be possible to allot an area of 352 acres per cusec. The return per cusec of capacity would then be Rs. 1,150 + 352 × 8 × 2 = Rs. 6,782 say Rs, 6,800. This would give a return of 17 per cent with an expenditure of Rs. 40,000 for saving one cusec of capacity. In short, the expenditure that would be justified per cusec of capacity would be as follows for the various percentages :—

Water saved utilised in Crown waste lands given on temporary cultivation.		Water saved utilised in Crown waste lands which are sold.		Water saved utilised in areas already receiving irrigation.	
Expenditure incurred to effect saving of 1 cusec of capacity.	% return	Expenditure incurred to effect saving of 1 cusec of capacity.	% return	Expenditure incurred to effect saving of 1 cusec of capacity.	% return
Rs.		Rs.		Rs.	
2,26,000	3	1,20,000	3	60,000	3
1,69,500	4	97,000	4	45,000	4
1,35,600	5	78,000	5	36,000	5
1,13,000	6	65,000	6	30,000	6

These calculations do not take into account the indirect benefit derived as a result of the ameliorative effect on water-logging. Waterlogging tends to accelerate the rise of sodium salts in the soil and thus helps the spread of Thur. An area of about 5,50,000 acres has already been stricken with Thur in the Province, and the average annual increase is about 20,000 acres. This clearly indicates the gravity of the present situation, and any step which tends to arrest this deterioration must naturally have a considerable potential value.

Considerations Governing Design

The principal factors which have to be considered in deciding the suitability of any design are :—

(*a*) PERMEABILITY, *i.e.*, reduction in absorption losses. Generally speaking, bitumen lining or a suitable form of concrete or brick lining would reduce these losses appreciably. The presence of any cracks, however, would also have a material effect on these losses.

(*b*) CO-EFFICIENT OF RUGOSITY, which will determine the carrying capacity of the channel.

It is preferable to use Manning's formula in designing the section as it is simple and fits closely to Kutter's, for which values of N have been determined by various experiments and deduced from several observations.

The values of N generally accepted are* :—

Surface	Perfect	Good	Fair	Bad
Brickwork in cement mortar.	·012	·013	·015	·017
Cement mortar surfaces.	·011	·012	·013	·015
Concrete Lined Channel.	·012	·014	·016	·018

*Engineering News Record, 24th February, 1916.

(*c*) DURABILITY.

This may be described as the resistance to the following disintegrating forces :—

(*i*) *Weathering* :—This is caused by the disruptive action of alternative freezing and thawing and by expansion and contraction resulting from temperature variations and alternate wetting and drying. The resistance of any surface to weathering is thus a function of its water-tightness and volume-change characteristics. It may be remarked in this connection that the co-efficient of expansion and contraction of brickwork is about 1/2 that of cement concrete or cement mortar.

(*ii*) *Chemical attack* :—The most important destructive agencies under this head are sulphate of sodium and magnesium, commonly encountered in so-called alkali soils and water. Corrosion of concrete by alkali water can be materially reduced by the use of sulphate resisting cement. Surface coating treatments are also generally effective in prolonging the life of the concrete or bricks, though this may not be a permanent remedy.

Alkali solutions increase in strength in dry seasons when dilution is at a minimum. The United States Bureau of Standards specify that concentrations greater than 0·1 of 1 per cent endanger concrete.

(*iii*) *Wearing* :—In the case of concrete or brick lining, this wearing action is negligible for all velocities under ordinary conditions.

(*d*) COST, both initial as well as subsequent maintenance.

This would vary with locality and the availability of various materials. Generally, brick masonry lining would be cheaper than stone concrete lining.

(*e*) STRUCTURAL STABILITY.

The following factors may be considered under this head :—

(*i*) *Reinforcement* :—In America, it is a common practice to reinforce the lining concrete. Reinforcement is designed to reduce the size ef contraction cracks and to assist in preventing failure of the lining due to settling of the sub-grade or to back pressure from a saturated sub-grade.

On the other hand, this may delay relief being obtained by local failure in small patches, in the case of heading up of

6″ and 9″ thickness would stand, as obtained from calculations, is indicated in the graph below :—

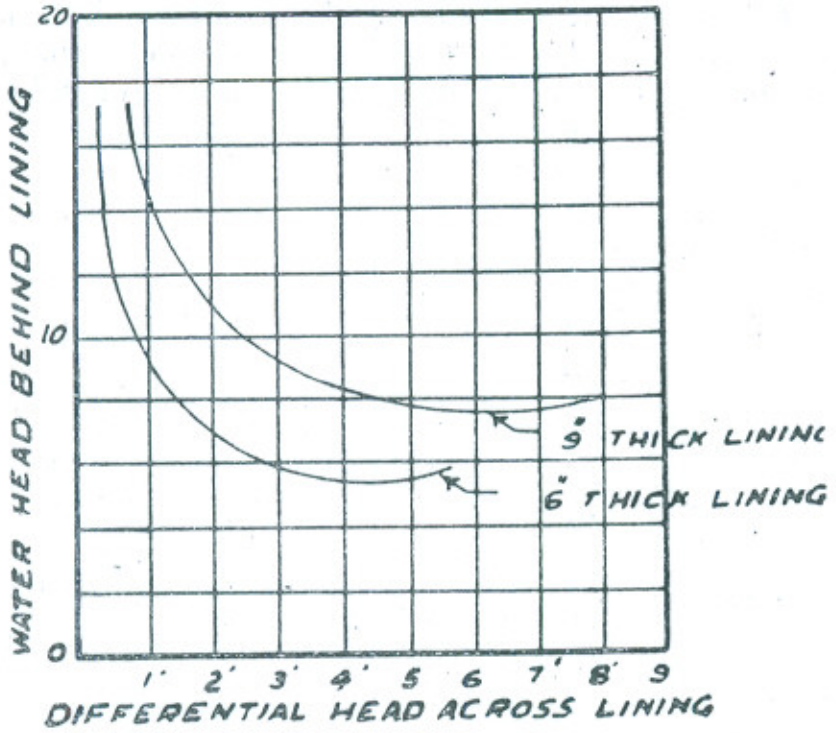

It would be seen that with greater depths the lining would only stand a slight difference of hydrostatic pressure on the two sides. This clearly indicates the importance of proper drainage so as to keep the difference of hydrostatic pressure across the lining as low as possible.

(*iii*) *Strength of lining* :—Any reasonable strength should be good enough if the materials used are such that they do not deteriorate in course of time. A piece of Bikaner lining showed on test a compressive strength of only 690 lbs/sq. inch.

The compression strength of 1 : 4 cement sand mortar after three months is considered to be over 3,000 lbs/sq. inch. Both cement concrete and cement brick masonry would thus give more strength than the Bikaner lining.

(*iv*) *Earth backing* :—In the Bureau of Reclamation specifications, it is laid down that lining should only be placed on an undisturbed material or thoroughly compacted back-fill. It is also necessary to provide adequate facilities for drainage of rain water to keep the backing in proper form. The American practice is to lay open joint pipes in gravel filled trenches to serve as longitudinal drains. Feeder lines are brought from the side slopes where necessar and outlets are provided as required to discharge the accumulated water. These points will be discussed later in greater detail.

water pressure, thus causing extensive damage. This was found to be the case on the Haveli Main Line.

(*ii*) *Thickness of lining* :—The side slopes of a channel to be lined should preferably be left nearly the same as the angle of repose of the natural surface, which is of the following order :—

Material.	Angle of repose.	Slope.
Firm clay well drained	45°	1 . 1
Clay loam, average sandy loam.	36°-33°	1⅓-1½ : 1
Sandy or gravel soil	33°-26°	1½-2 : 1

Where the slopes are left steeper, the sides have to be designed as sloping retaining walls. Etchevery* has worked out the following thickness of concrete lining corresponding to various depths of canals, based on Coulomb's formula :—

Side slope of Canal	Angle of repose of earth	Maximum depth of canal in feet. No surcharge and thickness of lining of				Maximum surcharge and thickness of lining of			
		1″	2″	3″	6″	1″	2″	3″	6″
1/2 : 1	1 : 1	5·3	10·6	16·0	32·0	1·6	3·3	5·0	10·0
1/2 : 1	½ : 1	1·6	3·2	4·8	9·6	0·6	1·2	1·8	3·6
1/2 : 1	2 : 1	1·0	2·0	3·3	6·0	0·4	0·8	1·2	2·4
1/2 : 1	3 : 1	0·5	1·1	1·6	3·2	0·3	0·6	0·9	1·8
1 : 1	1½ : 1	15·8	31·6	47·5	94·8	4·8	9·7	14·5	29·0
1 : 1	2 : 1	3·8	7·7	11·5	23·0	1·9	3·8	5·7	11·4
1 : 1	3 : 1	1·9	3·8	5·7	11·4	0·8	1·7	2·5	5·0
1½ : 1	2 : 1	37·0	74·0	111.0	222·0	11·3	22·6	34·0	68·0
1½ : 1	3 : 1	6·2	12·4	8·6	17·2	2·5	5·1	7·6	15·2

These results may be considered as useful for practical application only within reasonable limits.

The thickness required would be much more, if provision has to be made for any hydrostatic pressure across the lining.

In the worst condition, the lining is subject to pressure due to saturated soil and the differential water head across it. Assuming angle of repose of earth to be 30° and angle of slope of linning as 45°, the differential head that a lining of

*Irrigation Practice and Engineering, Volume II, by B. A. Etchevery.

Various types of Lining

The types generally used for lining so far are :—

(*a*) Cement or lime concrete—2″ to 6″ thick.

(*b*) Cement mortar—$\frac{1}{4}$″ to 1$\frac{1}{2}$″ thick.

(*c*) Stone Masonry set in cement or lime mortar—6″ to 12″ thick.

(*d*) Road oils.

(*e*) Sodium Carbonate Plaster.

(*f*) Clay puddle—3″ to 6″ thick.

(*g*) Brick lining combined with cement mortar—3″ to 6″ thick.

(*h*) Precast cement concrete blocks.

(*i*) Tar or bitumen impregnated cloth covered by masonry.

Concrete Lining

This is a very useful type and is generally adopted. It is durable if laid properly, and reduces the absorption losses by nearly 95 per cent. The co-efficient of rugosity is very low, and in view of the high velocities possible, the section is considerably reduced. The All American Canal is a concrete lined channel.

On the Gang Canal* which consisted of 6″ of 1 : 1 : 6 mixture of lime, grit and kankar ballast, a value of Kutter's N=0·013 was adopted. The value actually obtained was, however, reported to be 0·0145 in 1935 and 0·0153 in 1939. As all the ingredients were obtained from local kankar, the cost was quite low, *viz.*, Rs. 22/8/- per cent. sq. ft.

The joints were made V or Y shaped and later filled with bitumen in the case of the Gang Canal. A lap type is not desirable as it breaks at the shoulder under tension. A butt Joint $\frac{1}{4}$″ wide underlaid by a 1 : 4 : 8 concrete sleeper 1′ wide, and of the same thickness as the lining is considered to be better than a V or Y shaped joint, as this would obviate the necessity of filling with bitumen afterwards, and would simply mean leaving plain construction joints at specific places.

To avoid cracks, it is desirable in such cases to limit the size of blocks to say 20′ × 20′ or 15′ × 25′. Alternate blocks should be laid and preferably an interval of seven days allowed so that the setting contraction may take place. Alternatively, strips 5′ wide may be left all round the blocks, and these strips may be concreted after a week.

---

*Concrete Lining of the Gang Canal by C. E. Jefferies., Punjab Engineering Congress, Paper No. 102.

To avoid the subgrade absorbing moisture from the bottom portion of the concrete and thus making it spongy and permeable, it should be thoroughly moistened. According to the Bureau of Reclamation, U. S. A., the proper moisture penetration is 12" in sandy soil and 6" in other soils, except when this much moisture causes the subgrade to become muddy.

Other alternatives are :—

(*a*) Use of oil paper. This has been found to give very good results. The cost works to about Rs. 2 per cent square feet.

(*b*) Spreading of any crude oil on the subgrade so that the whole of the surface is fully covered. This may be usefully adopted where oil paper is not available. The cost of using linseed oil @ Rs. 3 per gallon works out to Rs. 1/10/- per cent square feet.

(*c*) A 1 : 6 cement plaster on the subgrade. The plastering need not be very accurate, and half the labour rates normally paid for plastering should be good enough for this type of work. The cost including materials would work out to about Rs. 3/8/- per cent square feet in this case.

(*d*) Spreading 1/8th" layer of 1 : 4 cement sand slurry a couple of hours before placing the concrete. The slurry can be poured direct from the cans. This has been found to be quite successful in actual practice, and the cost works out to about Rs. 1/8/- per cent square feet.

The consistency of concrete used in lining is a very important factor. The United States Bureau specifications for canal lining* lay down that this consistency is critical. 'The concrete must be fluid enough to compact well, especially under the reinforcement, and yet stiff enough to stay in place or the slopes. The slump must be carefully regulated. If it is too low, honeycomb is difficult to avoid, and if it is too high, a bulging or wavy concrete surface may be produced. A properly designed mix, using well graded aggregate containing enough of the fine sizes to allow adequate finishing but not so much as to cause crazing of the finished surface, is necessary for satisfactory canal lining.'

Cement Mortar

This type is naturally not very durable unless suitably protected, and as such can only be used in conjunction with

*Concrete Manual by the U. S. Bureau of Reclamation.

some other protective material. According to Etchevery, 1" cement mortar stops 75 per cent seepage. Actually, however, it is much more effective as mentioned later in this paper.

Stone Masonry

This has a limited application mainly on account of the cost and can thus be used only where stone is locally available. The co-efficient of rugosity is comparatively higher in this case, as stone cannot be very finely dressed.

Road Oils

For using these, the soil is rolled or burrowed so as to secure a penetration of 2" to 3". It is estimated that 1/16th" layer of crude oil at about 1/3rd gallon per square foot stops 75 per cent seepage. This is thus not as impermeable as the other types. The co-efficient of rugosity is fairly high and its effect is not durable. This does not stop burrowing animals and will prevent weed growth for only a few seasons.

Sodium Carbonate Lining

This has been used in watercourses and small channels and consists of 1" plaster made up of clay, " bhoosa " and sodium carbonate in the proportion of 100 c. ft. of clay, 6 mds. of ' bhoosa ' and 9 seers of sodium carbonate. The cost to the zamindar who provides his own labour and ' bhoosa ' according to the figure given by Mr. G. R. Sawhney, in his paper* on the subject is Rs. 25 to Rs. 40 per mile.

The author had occasion to see some of this type of lining on the Lower Bari Doab Canal. The plaster was found to be damaged in most cases and cannot be considered to have a useful life of more than 2 or 3 seasons. The saving of water effected by its adoption could be attributed more to the proper alignment and grading of watercourses than to the plaster.

This method was also tried in the United Provinces but was not found to be a success. They had found that lining with ' Usar ' (local salty soil containing 10 per cent clay and 6 per cent sodium carbonate) was more effective. A bitumen and mastic plaster would however be much more durable than even ' Usar '.

Clay Puddle

This has been in use since a long time as the only material required is suitable clay. The selected soil is allowed

*Lining of Watercourses, by G. R. Sawhney, Punjab Engineering Congress, Paper No. 240.

to weather and then pugged thoroughly after saturating it with water, by men marching up and down. This pugged clay is then put in position and covered with about 1′ layer of silt. This was considered to reduce seepage by about 80 per cent.

The main idea of puddle is to prepare as dense a mass as possible so that the volume of voids is appreciably reduced. The quality of a puddle can thus be judged by its dry bulk density, which is a measure of its compaction. Recent researches have clearly shown that there is an optimum moisture content for each soil at which the dry bulk density obtained is the maximum. We cannot, therefore, hope to get the same density by saturating the soil, as has been the practice in the past, as by controlling the moisture content and keeping it as near the optimum as practicable. This moisture content can be easily determined in the laboratory by using a compaction apparatus. An approximation can also be obtained by using the author's formula* :—

$$W = 25 - \cdot 14\ S$$

where $W = \%$ optimum moisture content

and $S = \%$ of sand in the soil *i.e.*, particles over 0·05 m.m. in diameter.

The percentage of sand can be determined either by a Chain hydrometer after taking into account the time taken by various particles to settle after dispersal, in accordance with Stoke's law, or by passing the dispersed soil through a 270 mesh sieve, with water from a wash bottle playing over it.

Rolling can then be done in 6″ layers at the optimum moisture content with toothed rollers, as described in detail by the author in Punjab Engineering Congress, Paper No. 257, as these ensure a higher intensity of pressure and uniform kneading from bottom upwards.

It may be noted that the desirable placement range of moisture content is very much reduced with higher clay content and a more rigid control over moisture is thus necessary in such cases.

Puddle made, as detailed above, can conveniently be used where the expenditure has to be kept fairly low and a high degree of impermeability is not required. The extra cost of this type of puddle works out to about Rs. 4 per cent c. ft., excluding carriage charges, in case suitable earth has to be brought from a distance.

*Densification of Canal Banks, by S. I. Mahbub, I S.E., Punjab Engineering Congress, Paper No. 257.

Brick Lining

This was used on a large scale for the first time in America in 1933 on the Southern Taxas Irrigation Canals.* It was also adopted with suitable modifications for the Haveli Main Line in 1937.

The Haveli lining† consisted of two layers of tiles $12'' \times 5\frac{7}{8}'' \times 2\frac{1}{2}''$ laid in cement masonry with $\frac{1}{2}''$ of 1 : 3 cement plaster sandwiched in between. The bottom layer of tiles was bedded on a $\frac{1}{2}''$ layer of 1 : 6 cement plaster. The masonry was reinforced with $\frac{1}{4}''$ M. S. bars laid in the 1 : 3 plaster, forming a grid $12\frac{1}{4}' \times 12\frac{1}{4}''$ in the sides and $24\frac{1}{2}'' \times 24\frac{1}{2}''$ in the bed.

This lining failed in several reaches within a year of its construction due to water getting behind the lining from external sources and from wave action overtopping the lining. In one case the water caused a breach of the bank behind the lining, after which the lining subsided. In the other cases, which were many, the pressure behind the lining caused it to fail and fall into the canal. No lining of practicable thickness could have stood under either of these circumstances. The defects brought by the failure were :—

(*a*) Inadequate compaction of the back-fill.

(*b*) Lack of proper provision for the drainage of the banks.

(*c*) Insufficient free-board.

Nothing was thus found wrong with the type and no similar trouble can be anticipated if the above defects are effectively removed in future designs. These will be considered later on in some detail.

It may be worth while to consider the suitability or otherwise of this design.

PERMEABILITY :—The absorption losses in an unlined channel are found to vary from 6 cusecs/10^6 sq. ft. for channels with a discharge of 20 cusecs to 8 cusecs/10^6 sq. ft. for a channel with 2,000 cusecs discharge. These are thus given by the forumla :—

$$K = 5{\cdot}0\, Q^{{\cdot}0625}$$

where K is the absorption loss per million sq. ft. of wetted perimeter.

---

*How to Line Canals with bricks, by W. I. Gilson.

†Lining of the Haveli Main Line Canal, by R. S. Duncan, Punjab Engineering Congress, Paper No. 221.

Combining this with Lacey's formula $Q = 2{\cdot}66\sqrt{P.W.}$, we have the absorption losses

$$Q_A = 0{\cdot}0133\ L \times Q^{{\cdot}05625}.$$

In the case of the Haveli Main Line, no serious losses have been indicated so far by discharge observations. The total losses in a 45-mile length including the Sidhnai Pond, an unlined area of about 12 million sq. ft., are of the order of 80 cusecs in summer and 40 cusecs in winter. As a loss of 1 cusec/10^6 sq. ft. in the canal area corresponds to about 24 cusecs, we can safely assume that the losses do not in any case exceed 1·5 cusecs/10^6 sq. ft. It may be mentioned that the losses in the Gang Canal are also of the order of 1·5 cusecs/10^6 sq. ft.

Mr. Haigh has suggested the following formula for absorption losses in a brick lined channel :—

$$K = 1{\cdot}25 \times Q^{0{\cdot}056}$$

This, if anything, is on the safe side, as it means that with lining the absorption would be reduced by only 75 per cent.

Co-efficient of Rugosity :—The Haveli Main Line was designed with a co-efficient of 0·016 in Lacey's formula, equivalent to ·0146 in Manning. When the channel was first opened it worked out to 0·014 Manning. Subsequently, however, the co-efficient rose and it now varies between 0·018 and 0·020. There are two possible causes of this :—

(*a*) The presence of sand blown in or brought in from the head.

(*b*) The presence of caddis worm in large numbers.

It cannot be definitely stated whether this worm has a particular affinity for brickwork, or it is due to the changes in river conditions caused by the Headworks construction.

In any case it would be advisable in future designs to use a higher co-efficient for brick linings say 0·018, and to provide an adequate free-board.

It may be possible to improve the co-efficient of rugosity by spreading thin cement slurry over the top of the bricks. This may also add to the durability of the bricks.

DURABILITY :—This lining was completed about five years back, and so far no serious defects in the type have come to light. This can be considered to be a sufficient index of its durability.

Salts have, however, appeared mostly in the portion between the Kharif and Rabi F. S. levels, and if it is found from experience that its life is appreciably affected, the desirability of doing this portion in C. C. blocks or bitumen impregnated bricks or applying some surface coating as that of copper sulphate may have to be considered.

COST :—The actual cost worked out as below :—

Reinforcement ...	Rs.	3·2	per cent sq. ft.
Bottom plaster $\frac{1}{2}$" (1 : 6) ...	Rs.	1·6	do
Sandwich plaster $\frac{1}{2}$" (1 : 3)	Rs.	2·4	do
Tile masonry ...	Rs.	12·7	do
Miscellaneous puddling curing, etc.	Rs.	2·6	do
Total	Rs.	22·5	do

This is thus one of the best types for its cost. The reinforcement as already remarked has, however, been found to be unnecessary, as it simply delays relief being obtained by local failure in small patches, thus causing extensive damage.

All these points have been taken into consideration in the design of the lining of channels in the Thal and on the Jhang Branch. It is also proposed to use 10" × $4\frac{7}{8}$" × $2\frac{3}{4}$" bricks in place of tiles. It may be mentioned that the use of larger bricks means a saving in mortar, and would also result in a slight reduction of the overall expansion and contraction due to the difference in the thermal co-efficients of the brick and mortar. The size to be selected should thus be as large as can be conveniently handled. A 10" brick is easier to handle than a 12" tile, and also easier to manufacture, and has accordingly been preferred.

Construction of Brick Lining

Detailed specifications drawn out by the author for brick lining on the Jhang Branch and Thal Main Line, based on work on the Haveli Main Line, which is fully described by Mr. R. S. Duncan in his paper on Lining of the Haveli Main Line Canal, are given in Appendix II.

The following are the main precautions which should be observed :—

(*i*) The earth to be used in the manufacture of bricks should not have a salt content above 0·3 per cent and

the quantity of calcium carbonate should not exceed 2 per cent. The clay content should range from 10 per cent to 20 per cent.

(*ii*) Great care should be observed in the moulding and burning of bricks*. No *pila* bricks should be allowed to be used under any condition.

(*iii*) The bricks should be thoroughly soaked before use. This is important as bricks which absorb water quickly lose it as quickly when taken out of water. Each mason should thus be provided with a kerosene tin of water in which his immediate requirements of bricks can be kept.

(*iv*) Sand should have a fineness modulus of preferably not less than 1·2, and should be free from organic impurities. The percentage volume of silt in it should not exceed 6 per cent.

(*v*) The consistency of mortar should be properly regulated by having slump tests. The masons should not be allowed to mix water in the mortar pans at site, under any condition.

(*vi*) The plaster should be allowed to set properly for about two days before laying the masonry on top.

(*vii*) The subgrade should be properly moistened or oiled to avoid absorption of water from the bottom layer of masonry or plaster.

The bats obtained as a bye-product while burning bricks can be broken into ballast $\frac{1}{2}$" ring and used in concrete lining which can, for ease in execution, be restricted only to portions in the bed.

This concrete can be laid in compartments, as mentioned already and levelled and compacted by means of heavy screeds or tampers fitted with handles weighing not less than 7 lbs. per lineal foot. These should not be less than 3" wide and should have $\frac{1}{4}$" thick flat iron fixed on the underside. The surface can then be floated with a flat board 18' long and about 8" wide, after which it can be rolled, if necessary, by light rollers, weighing 10 to 12 lbs. per ft. run.

Brick Lining *versus* Concrete Lining

Brick lining in general has the following advantages over concrete lining laid *in situ* :—

(*i*) Comparatively low cost, as bricks can be manufactured at site, thus avoiding long carriages.

*For details see page 32 of 'The Kalabagh Barrage' by S.I. Mahbub, S.E., Punjab Engineering Congress, Paper No. 251.

(*ii*) Highly skilled or specialised labour is not required, as the work is of a simple straightforward nature.

(*iii*) No elaborate or expensive equipment is necessary as would be needed for concrete linings.

(*iv*) Due to the large number of joints, cross cracks due to contraction are greatly reduced, and buckling caused by expansion is eliminated.

(*v*) No expansion joints are necessary.

(*vi*) Brick lining can be more easily adopted to construction in circular sections.

(*vii*) There is no risk of any undetected thin areas due to poor workmanship, as the thickness is controlled in this case by the thickness of the bricks.

(*viii*) Repairs, when necessary, can be carried out easily and expeditiously, as no elaborate T. and P. is required.

Selection of Type of Brick Lining for Distributaries

To decide on a suitable lining for distributaries, Mr. Haigh, as Superintending Engineer, Thal Circle, instituted certain experiments to test the permeability of various types. These were conducted by Mr. C. L. Handa, on Hassuwali Distributary. The following types were tried :—

(*i*) 2½″ thick tile masonry in 1 : 3 mortar laid on cured and dry 3/8″ thick cement plaster, with G. I. Wire No. 10 as reinforcement — cost Rs. 15/12 per cent sq. ft.

(*ii*) 2½″ thick tile masonry in 1 : 3 mortar laid on cured and dry 3/8″ thick cement plaster, without reinforcement — cost Rs. 14/14 per cent sq. ft.

(*iii*) 2½″ thick tile masonry in 1 : 3 mortar laid on green cement plaster, with Maxwell fabric reinforcement — cost Rs. 19/12 per cent sq. ft.

(*iv*) 2½′ thick tile masonry over 3/8″ thick cured and dry cement plaster, with Maxwell fabric reinforcement — cost Rs. 19/12 per cent sq. ft.

Four tanks of lengths 398′, 249′, 251′ and 98′ were made and filled up to a fixed level. Readings for daily fall in level were taken twice a day by means of a Vernier gauge correct up to 1/1000 ft. Two evaporation tanks made of steel were also fixed at site within the main tanks to find out the losses due to absorption alone.

The experiments were carried out for one month, and the following is the average of the results obtained :—

Type.	Absorption losses Cusecs/10^6 sq. ft.	Evaporation losses Cusecs/10^6 sq. ft.	Total losses Cusecs/10^6 sq. ft.
I	·092	·154	·246
II	·0264	·146	·172
III	·280	·154	·434
IV	·0275	·1495	·177

It would be seen that the losses are minimum in Types II and IV, where the plaster was laid beforehand and cured for two days. Of these two, Type II is simpler and cheaper and therefore preferable. The tiles can, however, be conveniently replaced by bricks as mentioned already.

Precast Cement Concrete Blocks

These were tried at the time of repairs to the damaged Haveli Main Line*. The puddled slope was cement plastered after which precast cement concrete blocks $2' \times 1'$ with perforated legs were built up in cement mortar. The reinforcement was then threaded in and 1 : 4 : 8 concrete filled at the back.

The cost worked out to Rs. 56/10/- per cent sq. ft. against Rs. 25/5/- per cent sq. ft. for tile masonry and Rs. 67/4/- per cent sq. ft. for concrete laid *in situ*.

The precast blocks have undoubted advantages, the main being :—

(*a*) Facility in construction, as the blocks can be manufactured beforehand at one central dump for each heading and properly cured.

(*b*) This in turn would lead to greater structural strength and durability.

(*c*) A low co-efficient of rugosity as the surface is very smooth and regular.

(*d*) A high degree of impermeability, which would cut down absorption losses to a great extent.

(*e*) Reduced maintenance.

The main drawback, however, is its cost, as it would not seem worth while to spend more than double the cost of brick masonry, just to get a slightly lower co-efficient of rugosity which would result in some reduction of the section. The question of durability also is no doubt important, but brick masonry can be considered to be equally durable for all practical purposes.

On the suggestion of the Concrete Association, a slab and beam system was also tried in a short reach. This consisted of

*Observation on Lined (Haveli) Canal, by S. N. Kapur, I.S.E., Punjab Engineering Congress, Paper No. 253.

slabs $4' \times 1\frac{1}{2}' \times 2''$ bolted on to 5" wide reinforced concrete beams laid beforehand on the slopes. This was not found very convenient to execute, and the cost worked out to Rs. 98/3/- per cent. sq. ft. It cannot thus be considered to be a very practicable proposition.

Tar or Bitumen Impregnated Cloth Protected by Masonry

This type simply aims at the substitution of tar or bitumen impregnated cloth for the $\frac{1}{2}$" layer of 1 : 3 cement plaster.

Various experimental types of fabrics were obtained from Messrs Shalimar Tar Products and their impermeability was tested by the author under a 15′ head of water in an apparatus shown in Plate I. The results were encouraging in the case of fabrics, which were pliable and closely woven, as the losses remained very much under 1 cusec/10^5 sq. ft.

Later it was found that rot roof canvas, as supplied by Messrs George Henderson & Co. proved the most satisfactory, the maximum leakage obtained being 0·15 cusecs/10^6 sq. ft. Similar results were obtained after coating plain uncoated samples of the same material with a mixture of bitumen and tar in the ratio 4 : 1. It may also be mentioned that a $\frac{1}{2}$" thick 1 : 3 cement plaster gave a percolation of only 0·027 cusecs/10^6 sq. ft.

Experiments on a bigger scale on the various fabrics have since been instituted by the Chief Engineer, to be carried out in the Research Institute.

It can, thus, be safely assumed that suitable fabrics would be available which would be fairly impervious. The main criterion which would ensure their preference or otherwise over a layer of cement plaster would, however, be durability and cost, in addition of course to the availability of materials in sufficient quantities.

In the experiments at Daud Khel, it was found that hydraulic pressure had the effect of slowly displacing the bitumen from the pores of the cloth in some cases, thus resulting in a gradual deterioration of the results with time.

Compaction of Back-fill

The importance of having a stable back-fill which would not settle behind the lining cannot be over-emphasised.

This can be easily attained by rolling the earth sufficiently in 6" layers, with a 1·3 ton toothed roller 4′ wide, having knobs $6'' \times 4'' - 3''$ high, at optimum moisture content. Generally, 20 to 24 rollings would be good enough for the purpose. It

may be remarked here that the maximum dry bulk density would be obtained if the soil contains 70 per cent sand and 10 per cent to 20 per cent clay.

For determining the moisture content, the samples should be taken about 100′ apart or nearer if the soil constituents differ appreciably.

As it is not possible to roll the ends properly, an extra width of 1½′ on the inner side may also be compacted and then removed before lining.

Extent of Compaction required in the Banks

If all the voids in a soil are filled with water, the volume of water for a given pressure is called the natural volume of voids. The greater the pressure in the soil, the smaller is the natural volume of voids in it and *vice versa*. Settling will thus take place, if the actual volume of voids in the soil is greater than the natural volume when the soil gets wet and apparent cohesion ceases. Consequently the more permeable the soil, the sooner will it settle. The soil in a bank should thus be rolled to the natural volume of voids corresponding to the pressures which will be in the bank to avoid future settlement.

Several experiments were carried out to determine the natural volume of voids at different pressures in different soils by subjecting a saturated sample of the soil to varying pressures in a cylinder, as shown in Plate II, and measuring the reduction in its volume.

From these, curves were plotted connecting the load and the dry bulk density required to avoid settlement even in a saturated condition.

Assuming that the canal banks would not normally be subjected to a load of more than 1·0 ton per sq. ft. the D. B. density required in various soils is shown in the graph in Plate III.

It would thus be desirable to aim at this compaction, subject to a minimum of 110 per cent of the D. B. density of the natural soil in the locality.

The density of the finished bank should be checked by measuring it in one sample for every 500 c.ft. or so of the bank. This can be conveniently done by taking out the sample in the shape of a V, so as to accommodate a wedge, 6″ square base and 8″ height, in the hole. The wedge is then placed in this hole and a measured quantity of sand poured outside it from a graduated cylinder, so as to fill all hollows. The volume of

the soil would then be the volume of the wedge plus that of the sand and its dry bulk density can thus be calculated.

Design of Sections

The best form of lining section would seem to be an arc having sloping sides, more or less at the same slope as the angle of repose of the soil. The arc in the bed should be tangential to the side slopes. It can be easily shown (see Appendix I) that we get the most economical section, *i. e.*, the maximum area for the minimum wetted perimeter if the centre of the arc is at the F. S. Line.

This section is also useful as it has a higher silt carrying capacity than a wide shallow one. During low supplies, heading up has to be done at off-take sites which would cause some silting. This in turn reduces the velocity and also the value of 'f'. In the section proposed, however, with no level bed, the silt can deposit on and affect the rugosity co-efficient of a relatively small portion of the perimeter and hence cannot greatly affect the velocities. The effect on 'f' also would thus be correspondingly less.

The side slopes may be kept as 1 : 1 for radii less than 12′ and $1\frac{1}{4}$: 1 for radii over 12′, provided the angle of repose of the soil is not flatter than $1\frac{1}{2}$: 1, as shown below :—

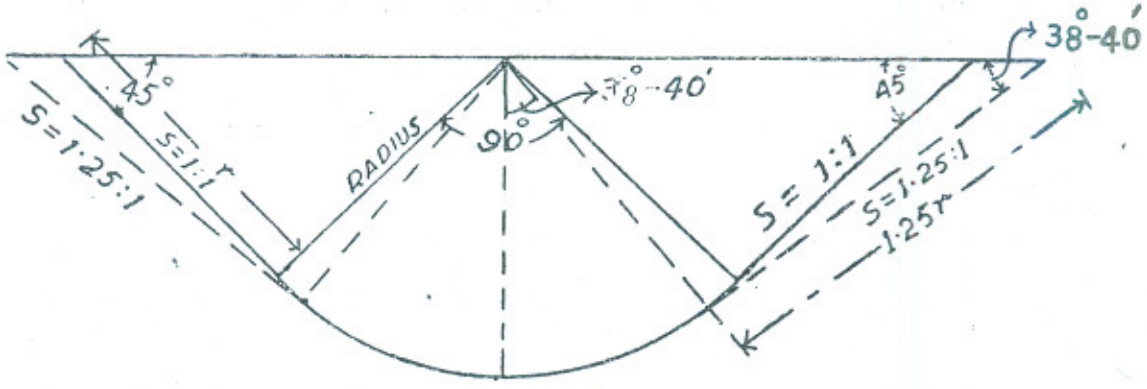

The sectional data would be given by the following formulæ :—

Side slopes	1 : 1	$1\frac{1}{4}$: 1
Section area	$1{\cdot}78\ r^2$	$1{\cdot}925\ r^2$
Wetted perimeter	$3{\cdot}56\ r$	$3{\cdot}85\ r$
Hydraulic mean radius (m) ...	$0{\cdot}5\ r$	$0{\cdot}5\ r$

The velocity according to Manning's formula is

$$= \frac{1{\cdot}486}{N} m^{\frac{2}{3}} s^{\frac{1}{2}} = \frac{1{\cdot}486}{N} m^{\frac{2}{3}} \frac{s_1^{\frac{1}{2}}}{10{,}000}$$

where s_1 is the fall in 10,000'

with N = ·018 we have

$$V = 0{\cdot}826\, m^{\frac{2}{3}} s^{\frac{1}{2}}$$

$\therefore$ Discharge = A V = $0{\cdot}92\ r^{2\frac{2}{3}}\ s_1^{\frac{1}{2}}$ for side slopes 1 : 1

& $0{\cdot}99\ r^{2\frac{2}{3}}\ s_1^{\frac{1}{2}}$ for side slopes $1\frac{1}{4}$: 1

and Lacey's $f = 0{\cdot}75\frac{V^2}{m} = 0{\cdot}40\, r^{\frac{1}{3}}\, s_1$

Graphs connecting, Q, s, r, f and V have been plotted for side slopes 1 : 1 and $1\frac{1}{4}$: 1 with N = ·018 (Plates V, VI,) and these can be conveniently used for design.

The free-board may vary from 1′ for r = 4 to 2′ for r = 16, which would be equivalent to $0{\cdot}5\ r^{0{\cdot}5}$.

The limiting depth of this section for all practical purposes may be taken as 15′ and so for discharges exceeding say 2,000 cusces, an alternative type as shown below may be adopted. This was adopted on the Haveli and is also proposed to be used on the Thal Main Line.

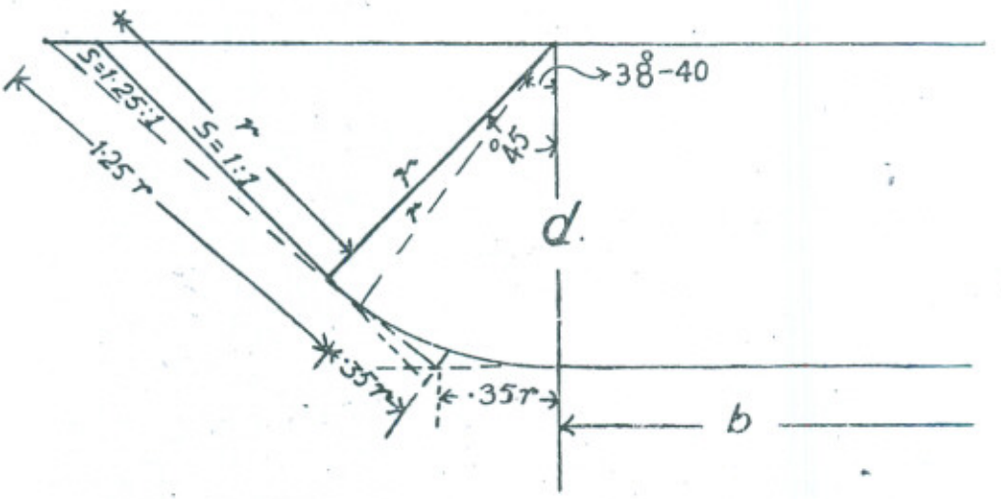

In this, the sectional data is given by the following formulæ,

$$\text{when } K = \frac{b}{d}, \quad C = \frac{m}{d} \text{ and N (Manning)} = \cdot 018.$$

Side slopes	=	1 : 1	$1\frac{1}{4}$: 1
Section Area	=	$d^2\ (K+1\cdot7854)$	$d^2\ (K+1\cdot9248)$
Wetted Perimeter	=	$d\ (K+3\cdot5708)$	$d(\ K+3\cdot8496)$
Velocity	=	$0\cdot826\ m^{\frac{2}{3}}\ s_1^{\frac{1}{2}}$	$\cdot826\ m^{\frac{2}{3}}\ s_1^{\frac{1}{2}}$
With $s_1 = 1$,			
Discharge =		$(K+1\cdot7854)\ 0\cdot8255\ C^{\frac{2}{3}}\ d^{2\frac{2}{3}}$	$(K+1\cdot9248)0\cdot8255\ C^{\frac{2}{3}}\ d^{2\frac{2}{3}}$
Lacey's f	$-\left(\frac{0\cdot75\ v^2}{m}\right)$	$=0\cdot511\ c^{\frac{1}{3}}\ d^{\frac{1}{3}}$	$0\cdot511\ c^{\frac{1}{3}}\ d^{\frac{1}{3}}$
	$C = \frac{K+3\cdot5708}{K+1\cdot7854}$		$\frac{K+3\cdot8496}{K+1\cdot9248}$

Graphs with N = ·018 for side slopes 1 : 1 and $1\frac{1}{4}$: 1 have been plotted correlating the various data (Plates VII, VIII), which would be found useful in designing any section.

This section is better than a trapezoidal section, as it is more stable and economical and also does away with the need of having a toe wall to support the sides.

The slope may be kept as the steepest practicable subject to a maximum velocity of 6′ per second and a minimum value of $f = 1\cdot2$.

Iron or concrete rungs, flush with the masonry may also be provided in the sides every 1,000′, spaced 2′ apart vertically to enable any person who falls in the channel to come out.

Drainage of Storm Water

As already mentioned, inadequate drainage facilities for the disposal of storm water were in a great measure responsible for damage to the Haveli Main Line.

The following precautions in this respect therefore seem desirable :—

(*i*) No berm should be provided in the channel as it simply forms a receptacle for water which can work its way behind the lining.

(*ii*) The dowel and bank should slope away from the channel. A slope of 1 in 80 for the bank and 1 in 20 for the dowel seems desirable.

(*iii*) A suitable drain should be provided at the toe of the bank to drain away the storm water.

(*iv*) In cases, where there is a spoil, a berm at least 5′ wide should be left on the spoil side of the drain.

(*v*) 10′ wide gaps should be left in the spoil 250′ apart to dispose off the water in the drains.

Typical cross-sections adopted for the Thal Main Line on this basis are shown in Plate IV, along with a type cross-section of the Haveli Main Line, which clearly bring out the improvement effected in the Thal sections.

Conversion of Existing Channels into Lined Channels

For canals and branches it will generally be advisable to construct a new lined channel along with the old one, as lining of the old channel cannot be carried out without interrupting irrigation supplies.

In the case of small channels, the question as to whether the construction could be carried out in rotational closures may, however, be investigated in detail in each case. In view of the saving which could be effected by this, as compared to a new channel, considerable expenditure would be justified on temporary arrangements for feeding the channels during construction. For instance, banks might be strengthened to permit channels to run with larger supplies for shorter periods and the rotational programme might be modified to meet construction requirements.

Lining in Reaches with High Spring Level

The lining of the head reach of a canal will not generally be a very economical proposition due to the high spring level. Any seepage from this reach is not wasted as it goes straight back to the river and the gauging site for the canal can be fixed at the head reach of the lined section.

There may be circumstances, however, in which it may be desirable to line a reach in an area of a high spring level. To enable this lining to be properly maintained and inspected, it would be necessary to arrange a system of pressure relief under the lining, having a gravity or pumping outfall, depending on the conditions at site.

This pressure relief can be arranged by one of the following methods* :—

*Note on Confocal Conics applied to Subsoil to and from open Channels, by F. F. Haigh.

(*a*) A continuous inverted filter under the lining.

(*b*) A system of drains or porous galleries.

(*c*) A system of vertical relief pipes.

In the case of (*a*) there would be great difficulty in avoiding any leakage between the canal and the filter.

(*b*) also suffers from this defect to some degree, since all the length of the drains must be adjacent to the bed.

(*c*) suffers least from this disadvantage and is probably the cheapest to construct.

The seepage discharge and thus the spacing and size of relief pipes or drains can be easily calculated from the formulæ drived by Mr. Haigh.

Whatever system is used, unless the outfall is through the lining, connection must be provided in the shape of drains or ducts, from the relief elements to the outfall.

Acknowledgments

The writer gratefully acknowledges the free use made of the notes on the subject by Mr. F. F. Haigh and R. B. L. Kanwar Sain. Other sources on which he has drawn have also been duly acknowledged in the paper.

APPENDIX I.

Determination of the most Economical Section of a channel.

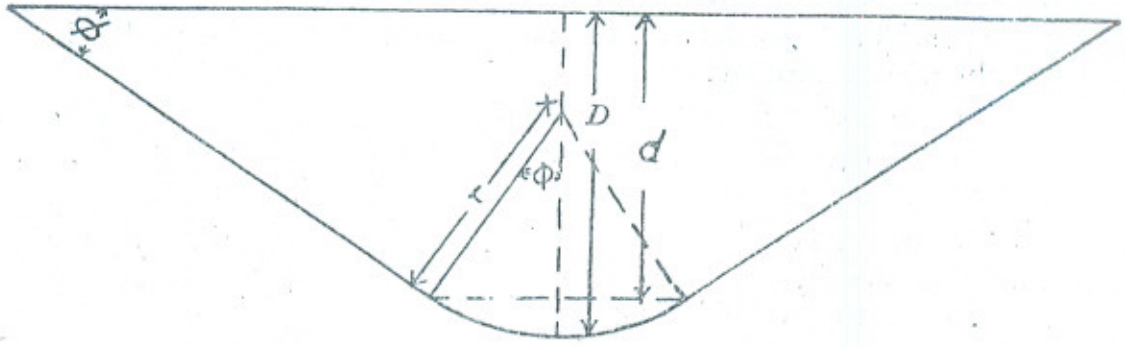

let r be the radius of the arc.
D the total depth of the channel.
d the depth above the arc.
and ϕ the angle of inclination of the sides.

Then length of arc $= 2\,\phi\,r$

length of Segment $= 2\,r\sin\phi$

Height of Segment $= r\,(1-\cos\phi)$

and Area of Segment $= \frac{2\,\phi}{2\,\pi}\,\pi\,r^2 - \frac{2\,r\cos\phi\;r\sin\phi}{2}$

$= r^2\,(\phi - \sin\phi\cos\phi)$

Area of channel A $= r^2\,(\phi-\sin\phi\cos\phi)$

$+\ 2\,r\sin\phi\,d + \cot\phi\,d^2$

and Wetted Perimeter P $= 2\,d\,\mathrm{cosec}\,\phi + 2\,\phi\,r$

$\therefore$ Hydraulic Mean Radius $= \frac{A}{P}$

$$= \frac{r^2\,(\phi - \sin\phi\cos\phi) + 2\,r\sin\phi\,d + \cot\phi\,d^2}{2\,\phi\,r \quad + \quad 2\,d\,\mathrm{cosec}\,\phi}$$

let $\frac{r}{d} = m$ or $r = dm$

then $R = \frac{d\left\{m^2\,(\phi-\sin\phi\cos\phi)+2\,m\sin\phi + \cot\phi\right\}}{2\,\phi\,m \quad + \quad 2\,\mathrm{cosec}\,\phi}$

Now $A = d^2 \left\{ m^2 (\varnothing - \sin\phi \cos) + 2m \sin\phi + \cot\phi \right\}$

$\therefore d = \sqrt{A} \left\{ m^2 (\phi \sin\phi \cos\phi) + 2m \sin\phi + \cot\phi \right\}^{-\frac{1}{2}}$

Substituting this value of d, we have

$$R = \sqrt{A} \frac{\left\{ m^2 (\phi - \sin\phi \cos\varnothing) + 2m \sin\varnothing + \cot\varnothing \right\}^{\frac{1}{2}}}{2\varnothing m + 2 \operatorname{cose}\varnothing}$$

As A is constant, R would be maximum when the above expression is maximum.

Let this expression be denoted by $\frac{u}{v}$

then $\frac{u}{v}$ is maximum when $\frac{d}{dm}\left(\frac{u}{v}\right) = 0$

or $v \frac{du}{dm} = u \frac{dv}{dm}$

or $(2\varnothing m + 2 \operatorname{cosec}\varnothing) \frac{1}{2} \left\{ m^2 (\phi - \sin\varnothing \cos\varnothing) + 2m \sin\varnothing + \cot\varnothing \right\}^{-\frac{1}{2}}$

$\left\{ 2m (\varnothing - \sin\varnothing \cos\varnothing) + 2 \sin\varnothing \right\}$

$= 2\varnothing \left\{ m^2 (\varnothing - \sin\varnothing \cos\varnothing) + 2m \sin\varnothing + \cot\varnothing \right\}^{\frac{1}{2}}$

or $(\varnothing m + \operatorname{cosec}\varnothing) \left\{ 2m(\varnothing - \sin\varnothing \cos\varnothing) + 2 \sin\varnothing \right\}$

$= 2\varnothing \left\{ m^2 (\varnothing - \sin\varnothing \cos\varnothing) + 2m \sin\varnothing + \cot\varnothing \right\}$

which on simplification gives $m = \sec\varnothing$

$\therefore \frac{r}{d} = \sec\varnothing$

or $\frac{r}{D.\ r\ (1 - \cos\varnothing)} = \sec\varnothing$

Or $r = D \sec\varnothing - r \sec\varnothing + r$

or $r \sec\varnothing = D \sec\varnothing$

or $r = D$

or for the most economical section, radius of arc should be equal to the total depth, *i. e.*, its centre should be on the F. S. Line, irrespective of the value of $\varnothing$.

APPENDIX II.

Specifications for Brick Lining

The lining shall consist of 2 layers of well burnt bricks $2\frac{3}{4}''$ thick with a $\frac{1}{2}''$ layer of 1 : 3 cement mortar sandwiched in between, resting on a $\frac{1}{2}''$ layer of 1 : 6 cement mortar.

The daily progress on any heading shall be limited to 25 ft. and work executed as detailed below :—

First Day :— The 25 ft. length to be lined the next day shall be thoroughly soaked with water, preferably by allowing a small depth of water to stand on the bed. This depth will however be regulated, depending on the type of soil met with, so as to ensure a good moistening of the subgrade without making it slushy and leaving it fit enough to work on the next morning. The side slopes also shall be well sprinkled with water in the evening using watering cans and 'mussocks' to ensure that the water penetrates to a depth of 6".

Any defects left in the initial dressing shall also be set right.

All the soaking tanks shall be filled with bricks required for work the next day.

Strict supervision shall be exercised to see that no underburnt bricks go into the soaking tanks and any such bricks that find their way on the work shall be promptly broken by the mate in charge. The rejected bricks and bats shall also be immediately removed outside the bed to avoid their getting mixed-up.

Second Day :—Before laying the bottom course of bricks, the bed and sides shall again be sprinkled with water liberally and this sprinkling kept up with and just in front of the masonry.

The lower layer of bricks shall be laid in 1 : 6 mortar on the bed as masonry, the mortar below the bed being the minimum necessary to bring the top of bricks to proper level. Masons shall work spread out across the bed and retreat longitudinally.

To ensure straight joints and a level top of the lining, mason's lines shall be stretched longitudinally forward for 20 ft. or so at 6' intervals across the bed.

The side slope masonry shall also be laid at the same time from scaffolding provided for the purpose. The scaffold

supports shall be kept in position by a small pile of bricks near the tangent points. Using planks 12′ long and 2½″ thick 3 such supports on each side would give 2 working spaces of 10′ each, which would be quite enough for giving the required progress. A longitudinal row of bricks done in advance near the tangent point shall be taken as a guide for keeping the joints straight, in the slopes. The wooden templates shall also have the breadths of courses marked on these and shall be placed in position on the guiding row of bricks near the tangent point.

3′ wide gaps shall be left in the bottom course of bricks in a length of 50′, equivalent to two days progress both in the centre as well as on the sides, to reduce damage to the bottom course at the time of laying.

It shall be seen that all joints are full of mortar. To achieve this, the masons shall apply mortar to the side of the brick, lay the next 1″ to 2″ away from it, and then press it towards the first brick, thus squeezing out the mortar, which would indicate that the joint has been filled up.

As the lining is being laid, a man sitting on a 1¼″ plank, a few rows to the rear of the working face shall start cleaning the joints, as it is difficult to do the same when the mortar is hard. He shall rake out the joints to a depth of about ½″ with a thin steel wire brush.

The mixing of mortar both for the plaster as well as for the masonry shall be strictly controlled and due attention paid to the cement water ratio. Both sand as well as cement shall be measured in 1 cft. or 2 cft. boxes and dry as well as wet mixing shall be done at least three times so as to get a thorough mix.

One trained Mistri shall be provided to watch the addition of water. He shall do a slump test every morning and then adjust the cement water ratio so as to get the same consistency as observed in the test mortar having a slump of ⅓″. Dry mixing shall be done on iron sheets and wet mixing in 3′ × 3′ × 1′ tanks, provided for the purpose. The quantity of wet mortar mixed in one batch, shall be such that it is all consumed within 30 minutes.

Only clean water shall be used in the mortar.

No mason shall be allowed to put water in the mortar pans at the site of work.

Due care shall also be exercised to see that the bricks are not taken out of the soaking tanks too early. Bricks which absorb water quickly also give up the same as quickly, when taken out of the tanks and if a brick has lost most of its water

content before use, it would detract considerably from the strength of the mortar. Each mason shall therefore be provided with a kerosene tin of water in which his immediate requirements of bricks shall be kept.

All soaking tanks at each heading shall be numbered and bricks shall be taken out from them serially. As soon as one soaking tank is emptied, fresh bricks shall be put in at the same time for use later on, the minimum soaking time allowed being six hours.

THIRD DAY :—On the third day the masonry done the previous day shall be sprinkled with water and kept covered with wet bags to guard against the heat of the sun.

FOURTH DAY :—Next day, the joints of the work done on the second day shall be tested with a broad chisel-pointed 5/8" diameter iron bar, weighed at the middle. The mates doing the test shall go on marking the hollow joints detected by them with coal-tar and these shall be repaired by the masons forthwith. The surface shall also be scraped and cleaned so as to have a good base for the plaster layer to be laid on top.

This cleaning and scraping shall be followed by the laying of the plaster, which shall be done in the bed as well as on the sides. The plaster shall be laid with extreme care as on this mainly depends the water-tightness of the lining. Its thickness shall be 3/8" and to ensure an even thickness, it shall be laid in strips 4′ wide by thin laths $1\frac{1}{2}$" × 3/8", extending across the canal for about 10 feet. After about 10′ is finished, the laths shall be lifted and advanced and another pair of masons shall start the neighbouring 4′ strip across the canal. The plaster shall be spread with a trowel and levelled with a straight edge.

Care shall be taken that the wetting of the masonry prior to plastering is carried out properly.

The 3′ wide paths left in the bottom layer shall also be filled up before spreading the plaster, under the personal supervision of the overseer.

FIFTH DAY :—The next day the plaster shall be lightly scraped with wide wire brushes and then covered with mats of cement bags and kept wet.

SIXTH DAY :—On the sixth day the plaster shall be cleaned and lightly scraped and the top layer of bricks laid on 1/8th" layer of 1 : 3 cement mortar. The vertical joints shall be 1/4" wide.

To prevent damage to the plaster and the bottom course of bricks by the labourers carrying the bricks, $1\frac{1}{4}$" thick planks shall be provided.

Some sorts of obstacles shall also be put in to prevent coolies going over green sports of masonry or plaster.

The laying of the top course of bricks shall be done in the same way as the bottom layer, due care being taken to see that the joints are straight and the top, which is to be the final designed bed, is at the correct level.

SEVENTH DAY :—On the seventh day, the top course shall be kept wet by sprinkling water and covering it with mats.

EIGHTH DAY :—The next day it shall be tested for hollow joints and the latter repaired, after which the work shall again be covered with wet mats.

NINTH DAY :—On the ninth day, when the lining is completed, a small earthen cross bundi shall be made at either end and the area flooded by water. The slopes shall be covered with mats and kept wet by watermen. This curing shall be done for at least one month.

PLATE I
PAPER No. 260

SKETCH
OF
APPARATUS FOR PERCOLATION TESTS
OF
LINING WITH TAR OR BITUMEN IMPREGNATED CLOTH

SCALE 1" = 1 F.T.

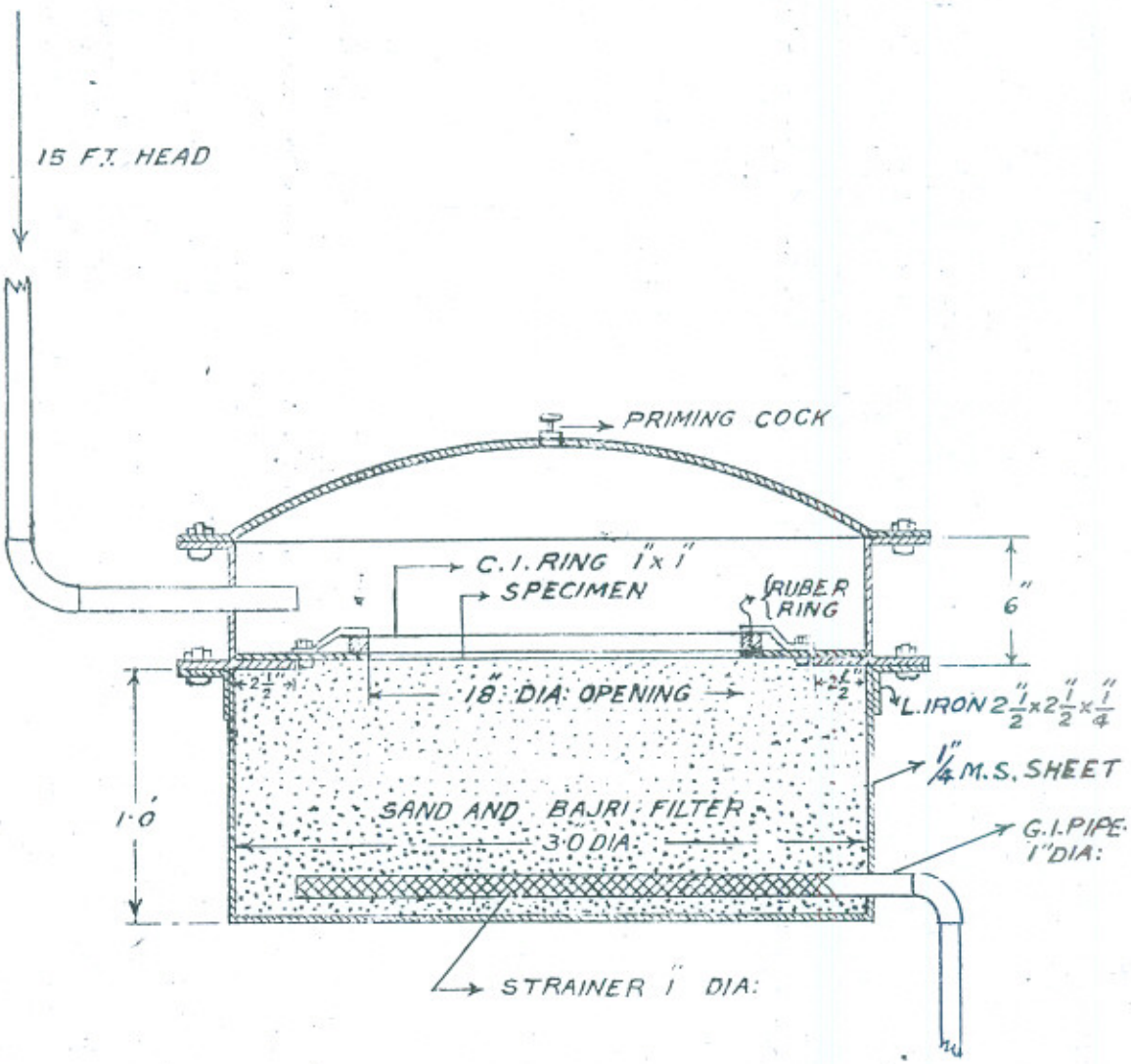

PUNJAB ENGINEERING CONGRESS
1943

APPARATUS FOR TESTING COMPACTION OF SATURATED SOILS UNDER STATIC PRESSURE

SCALE 2" = 1 FT.

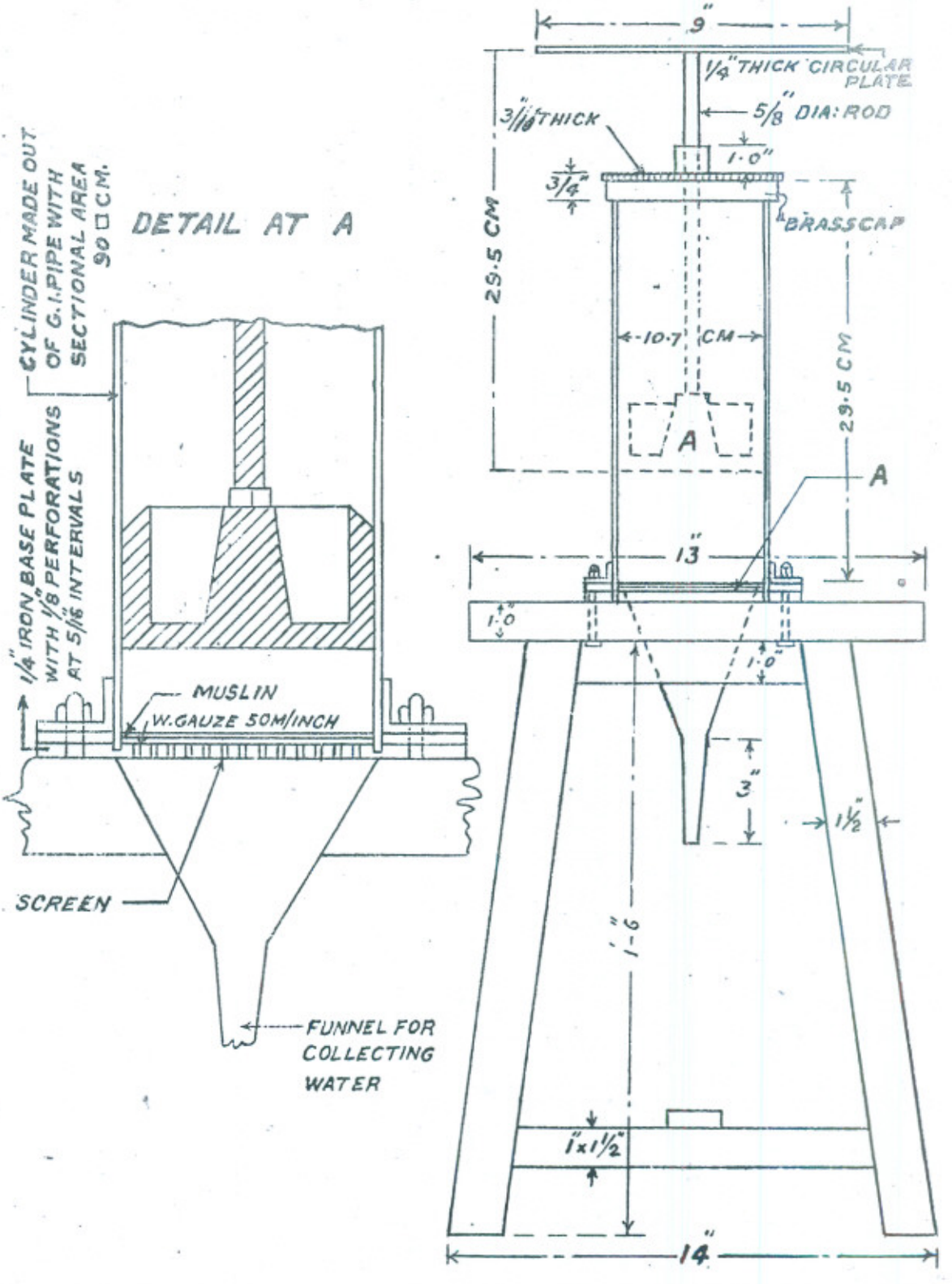

PLATE III
PAPER No. 260

GRAPH SHOWING
D. B. DENSITY TO WHICH THE SOIL SHOULD BE COMPACTED TO AVOID SETTLEMENT
(LOAD 1 TON PER SQ. FT.)

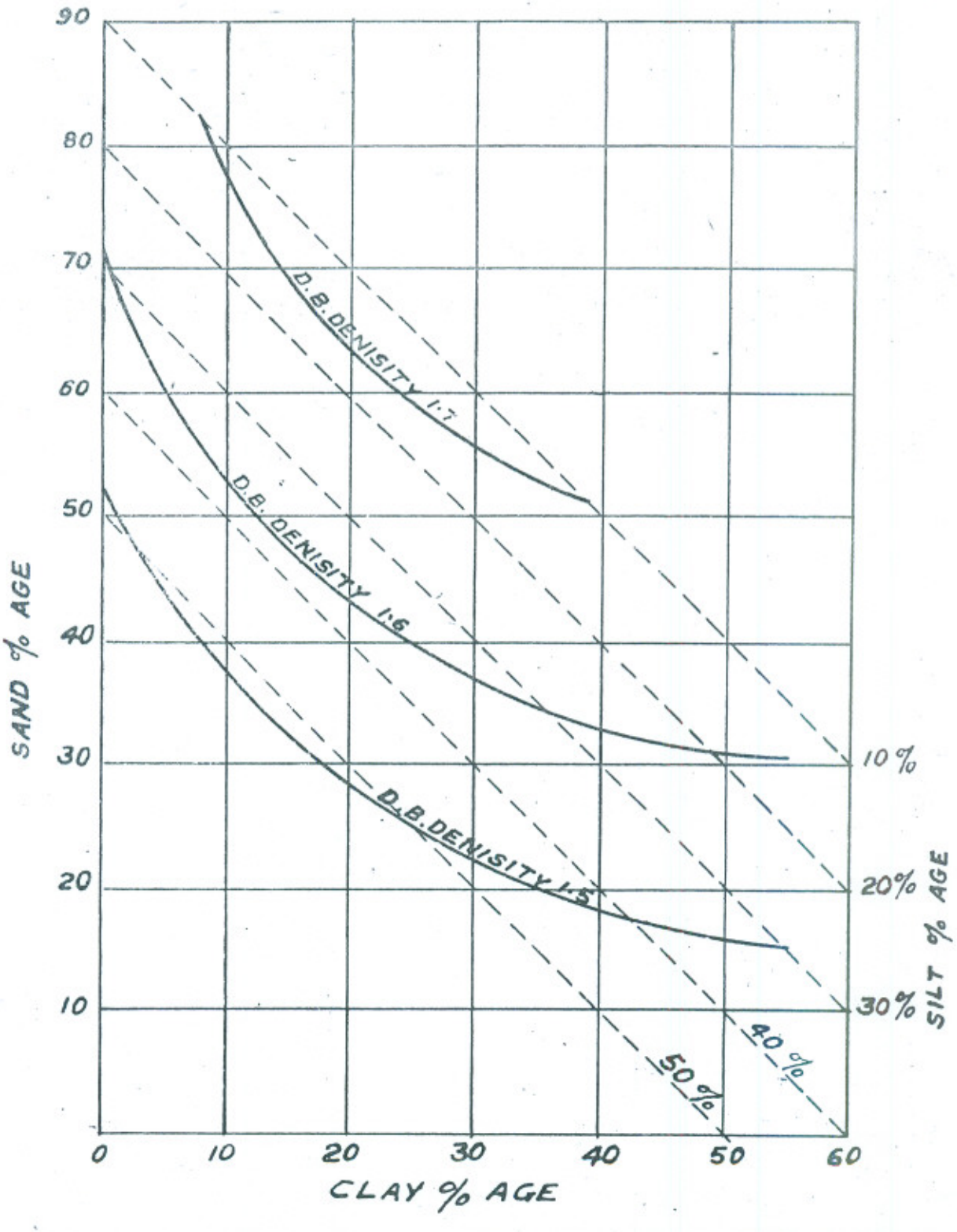

PUNJAB ENGINEERING CONGRESS
1943

TYPE CROSS SECTION OF HAVELI MAIN LINE

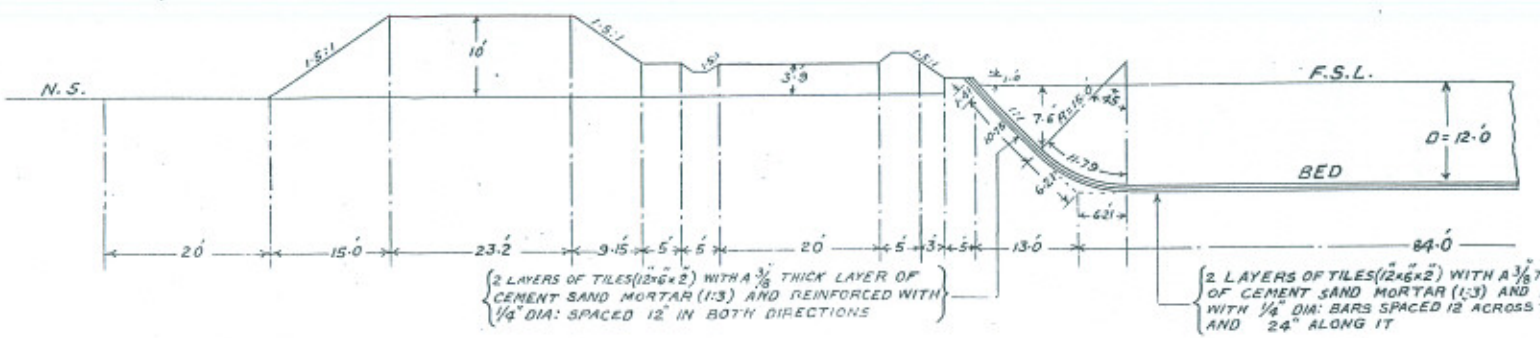

TYPICAL CROSS SEC OF LINED CHANNEL

SCALE = 1/200



GAPS 10 FEET WIDE TO BE LEFT IN SPOIL AT 250 FEET INTERVALS

TYPE CROSS SECTION OF THAL MAIN LINE UPPER (WHEN N.S. IS ABOVE THE FINAL BALANCING DEPTH)

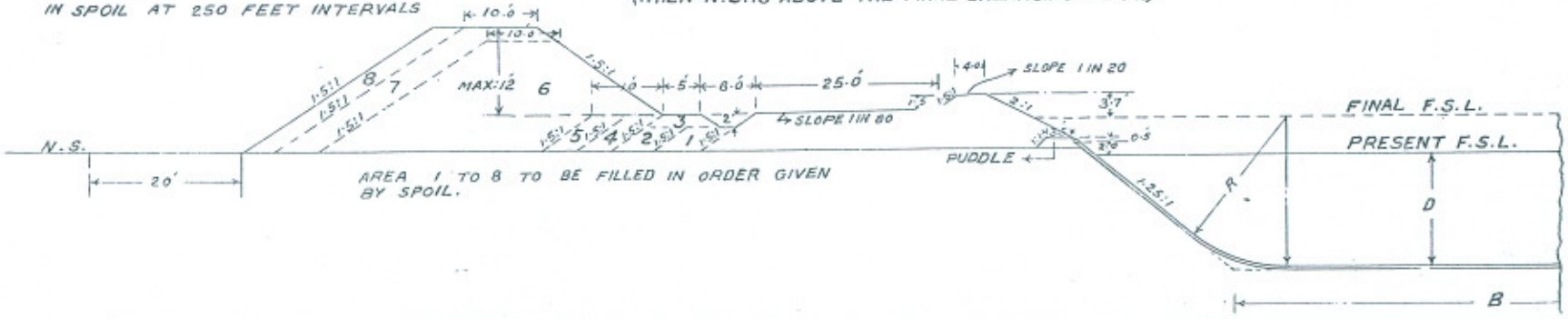

AREA 1 TO 8 TO BE FILLED IN ORDER GIVEN BY SPOIL.

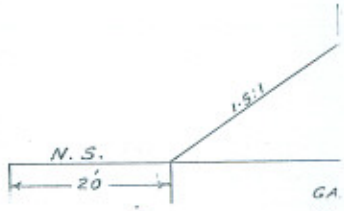

GA
IN

PLATE IV
PAPER No. 260

TYPICAL CROSS SECTIONS OF LINED CHANNELS

SCALE = 1/200

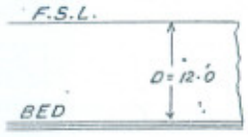

'S OF TILES (12"×6"×2") WITH A 3/8" THICK LAYER
'NT SAND MORTAR (1:3) AND REINFORCED
DIA: BARS SPACED 12" ACROSS THE CANAL
1" ALONG IT

TYPE CROSS SECTION OF THAL MAIN LINE UPPER
(WHEN N.S. IS BELOW PRESENT BALANCING DEPTH)

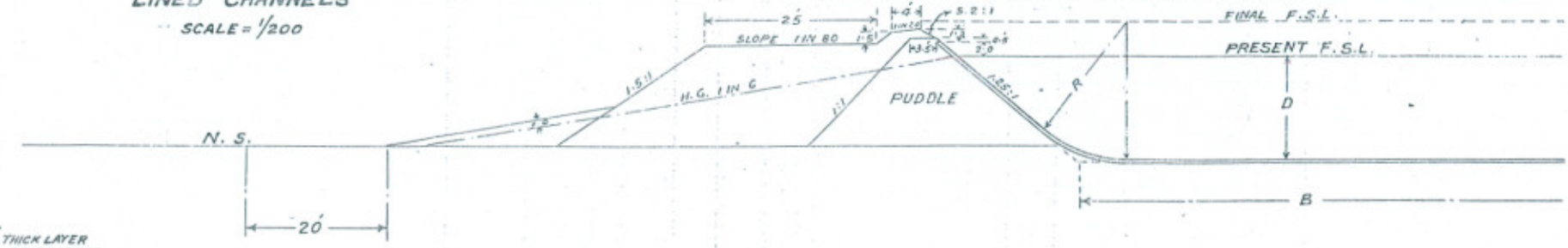

TYPE CROSS SECTION OF THAL MAIN LINE UPPER
(WHEN N.S. IS MORE THAN 2' ABOVE FINAL F.S.L.)

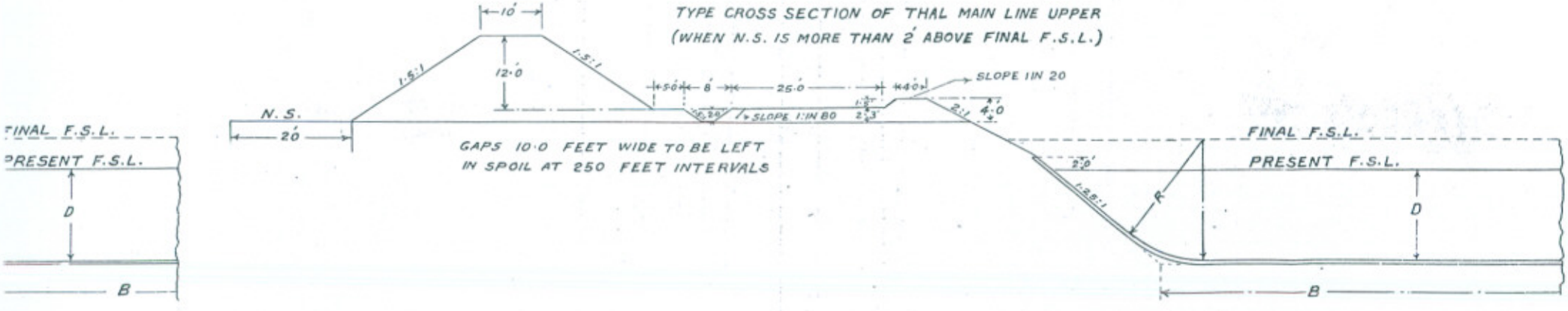

PUNJAB ENGINEERING CONGRESS
1943

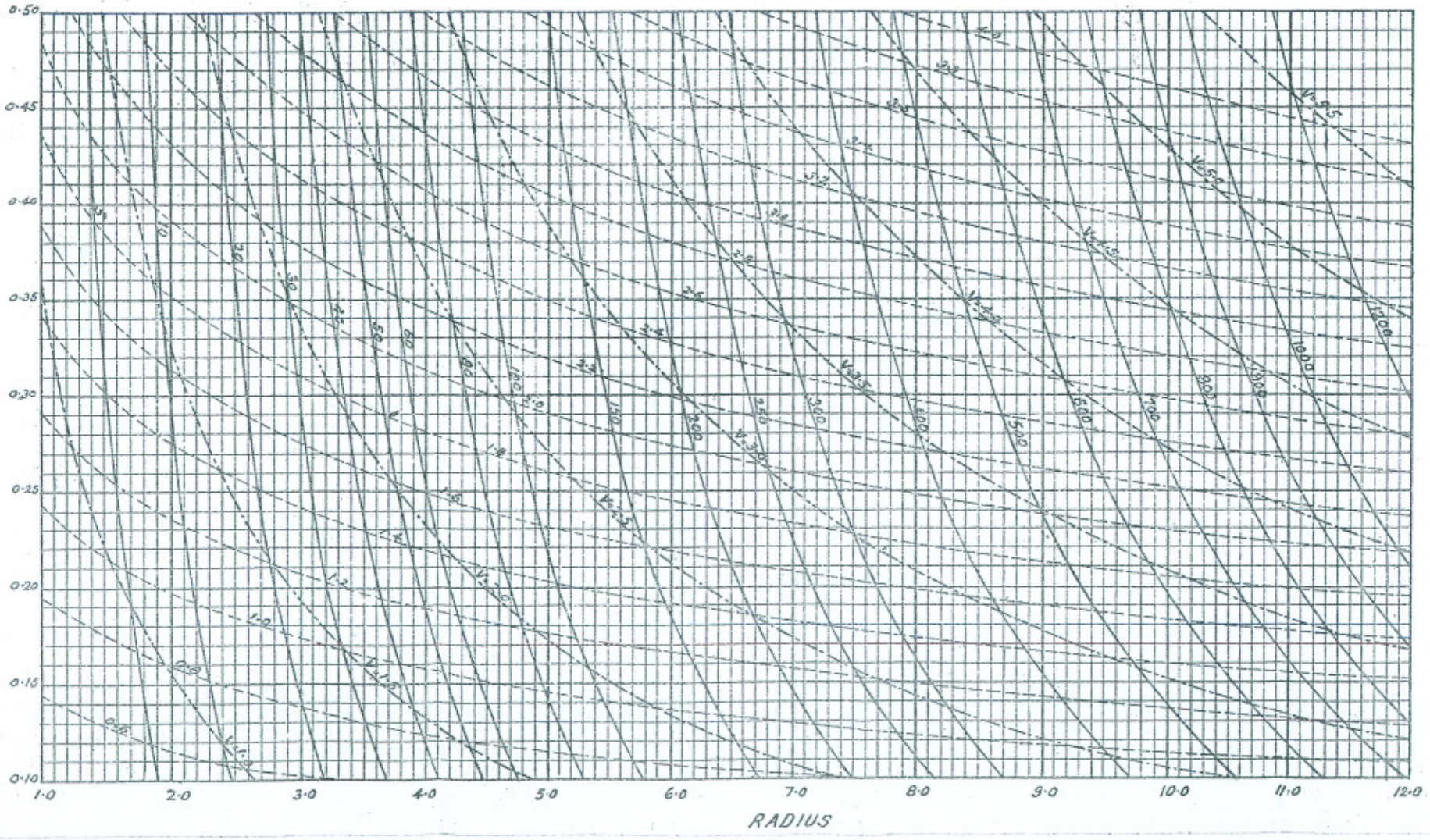

D

WITH I TO

FOR OTHER

(i) TO DETERMIN.

READ AGAINS

N = 0·018

N¹ = 0·015

$\frac{N^1}{N}$ = 0·8333

(ii) TO DETERMINE

READ FOR THE D.

N = 0·018

N¹ = 0·015

$\frac{N}{N^1}$ = 1·200

(iii) TO DETERMINE

READ FOR THE

N = 0·018

N¹ = 0·015

$\left(\frac{N}{N^1}\right)^2$ = 1·440

N.B.:-

1. FIRM

2. DOTT

3. CHAIN

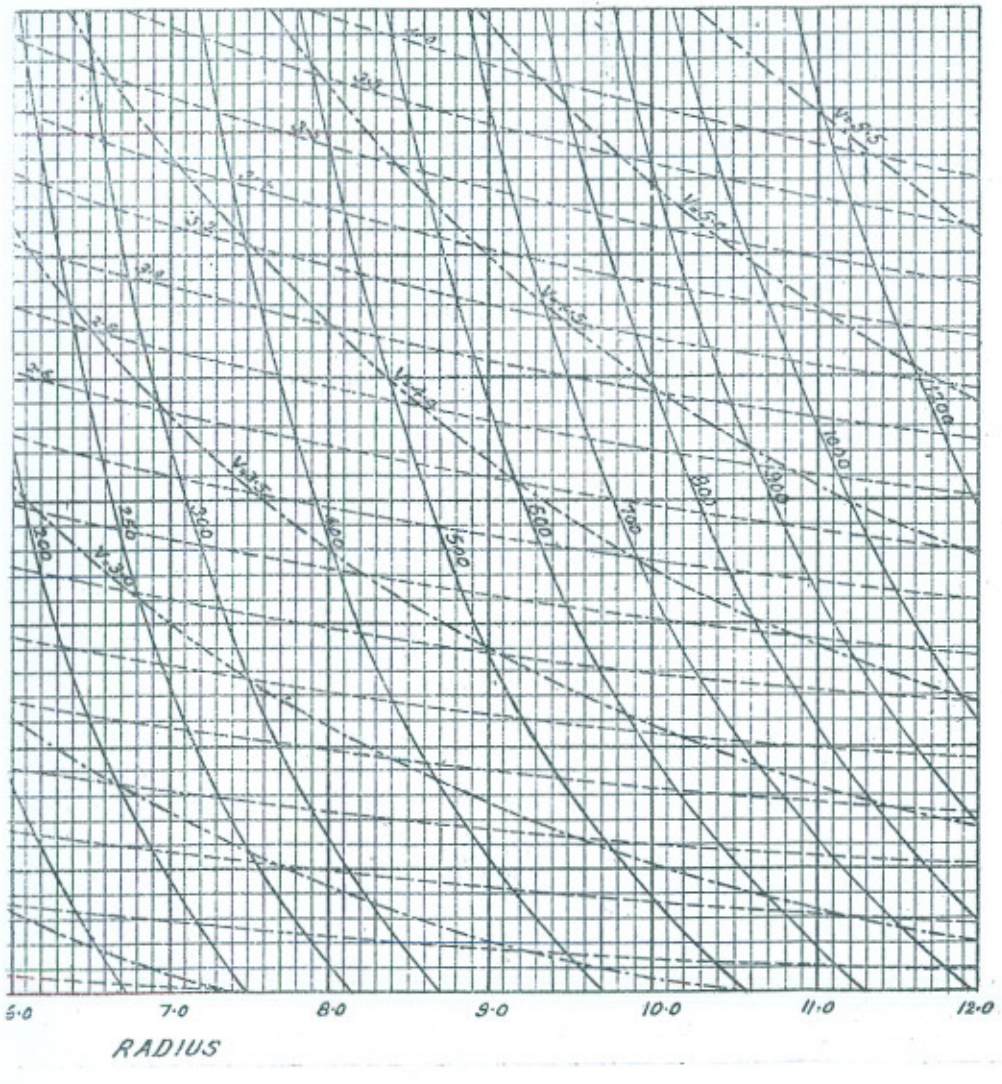

DISCHARGE OF LINED CHANNEL

WITH 1 TO 1 SIDE SLOPE AND N=0·018 IN MANNINGS FORMULA

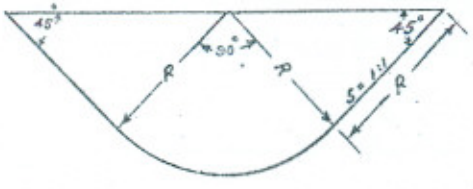

FOR OTHER VALUES OF N

(i) TO DETERMINE R,
READ AGAINST DISCHARGE MULTIPLIED BY $\frac{N1}{N}$

N = 0·018				
N1 = 0·015	0·016	0·020	0·022
$\frac{N1}{N}$ = 0·8333	0·8889	1·111	1·222

(ii) TO DETERMINE V,
READ FOR THE DISCHARGE CALCULATED ABOVE AND MULTIPLY IT BY $\frac{N}{N1}$

N = 0·018			
N1 = 0·015	0·016	0·020	0·022
$\frac{N}{N1}$ = 1·200	1·125	0·900	0·8182

(iii) TO DETERMINE f,
READ FOR THE DISCHARGE CALCULATED ABOVE AND MULTIPLY IT BY $(\frac{N}{N1})^2$

N = 0·018			
N1 = 0·015	0·016	0·020	0·022
$(\frac{N}{N1})^2$ = 1·440	1·2656	0·810	0·6694

N.B.:-

1. FIRM CURVES SHOW DISCHARGES IN CUSECS.
2. DOTTED CURVES SHOW VALUES OF f.
3. CHAIN DOTTED CURVES SHOW VALUES OF V.

PUNJAB ENGINEERING CONGRESS
1943