Paper No. 404

SURVEYING AND MAPPING FOR ROAD

By

SALEEM AKHTER BHALLI PSE*

The provision of an efficient, properly constructed and adequately maintained road transportation system is vital at all stages of national development. The location, construction and the much wanted improvement of the road system is governed by careful planning and designing, based on field surveys.

After having decided the location of a new route between two points from considerations of economy, feasibility, terrain conditions, administrative needs, right of way costs and alternate locations, it is required to keep the route as direct as possible with gradients and curvature held to a reasonable minimum. Similarly for improving an existing road facility with a view to rendering it fit for the increased volumes, intensities and speeds of the traffic, the investment will not be worth the while if it is not predetermined as to what we have and what is our goal for accomplishment.

In the course of concerns with situations and problems of the above mentioned natures from time to time during recent years, an unmistakable evidence of a wide-spread need for a lucid spelling out of the requirements of field surveys—both for new locations as well as improvements to existing ones —was felt. This need has opportunely become unavoidable at the present juncture when plans for some new roads and comprehensive schemes for the reconstruction, rehabilitation and major improvements to our entire road system in the Punjab are being contemplated. This has necessitated the categorization of surveying and mapping of new roads and of existing roads in a distinct manner because the conditions, requirements and purposes of the two categories differ appreciably. With a view to unifying and standardising the surveying and mapping of the new and the existing roads, following comprehensive scopes of work are presented as guide-lines to the Highway Engineers as well as the Surveying Agencies. Under the present policies of the Government it would have been perhaps ideal to carry out the surveys in question through the departmental forces but because of the lack of the required experience, equipment, time and finances, it is more expedient to accomplish this enormous task through private sector. Hence it is all the more necessary

**Design Officer, Punjab Highway Department.*

to methodically lay down the requirements of such surveying and mapping. For smaller jobs of new road locations and improvement projects in the Province, however, it is expected that the departmental forces will also be able to follow the same standards and produce work of the same quality.

1. SCOPE OF WORK FOR SURVEY AND MAPPING FOR NEW ROADS

The scope of work should be divided into four categories :

A. General.
B. Survey.
C. Drafting.
D. Submission.
E. Staking out.

A. General

1. The purpose of this contract is to provide a Highway Authority with sufficient information, data and detailed drawings necessary to facilitate the design of a Highway or Road.

2. The work of the Surveying Firm should be checked, without prior notice, by the representatives of the Highway Authority. The Surveying Firm should cooperate with the representatives and make available all information in the field or the office, as may be directed, to satisfy the Highway Authority that the work is being carried out correctly and in accordance with provisions laid down herein.

3. The survey and the submitted drawings should include an additional distance of two thousand and five hundred (2500) ft. beyond each end of the specified mileage or points on the indicated alignment so that intersections and passing sight distances etc., can be properly designed.

4. The accuracy of the detailed surveying should be to the following standards (third order of accuracy):

(*i*) Linear measurements 1 : 3000

(*ii*) Theodolite readings : to the nearest second with average of three (3) readings at each station being recorded.

(*iii*) Levelling : The maximum allowable closing error in level circuits should be $.05 \times \sqrt{\text{number of miles in feet.}}$

5. (*a*) The payment for surveying and mapping as per this scope of work should be made for each mile or part thereof of the distance

measured along the centerline indicated by the Highway Authority for detailed survey at the rate agreed upon. No additional payment should be made for work done under paras A.3 above or B.2 below.

(*b*) A separate rate for staking out of the final designed alignment should be settled with the Surveying Firm. The scope of work for this should be as defined vide Section E. The unit of payment for staking out should be a mile or part thereof, measured along centerline of the finally designed highway.

B. Survey

1. Sufficiently detailed and accurate surveys should be carried out to permit proper detailed engineering designs and drawings to be prepared.

2. Preliminary Surveys:

(*a*) The preliminary survey should be a centerline survey, established by theodolite traverse along the alignment indicated by the Authority on the G.T.S. map (original or reproduced) and as directed by the Highway Authority. Temporary stations along this line should be established by the Surveying Firm at intervals of one thousand (1000) ft. with such materials as can last for at least six (6) months and can be traced out conveniently during the detailed surveys. These stations should be thoroughly referenced to existing permanent points on the ground to facilitate their location subsequently. The Surveying Firm should be responsible for the location and maintenance of these stations for the durations of the detailed survey (Para. 3).

(*b*) The stationing of the centerline should be continuous starting with zero at the beginning of the designated mileage. Angles should be carefully read and checked by double centering. The magnetic bearing of each tangent section of centerline should be noted, correct to the nearest minute. Only important features and structures likely to affect the location of the alignment in question should be shown in plan, provided these are within two hundred and twenty (220) feet from each side of the provisional centerline (Para. 2.a). These features should include water, drainage and sewerage lines, service and approach roads, irrigation ditches and channels, rivers and streams. Only the chainage at the centerline of such features should be indicated but their spans and sizes should be noted on the plans. Places

of worship, graveyards etc., and permanent structures, however, should be indicated with all extremities. The skew angles of all structures, road crossings, irrigation and drainage ditches etc., should also be indicated on the plans. The field notes of the preliminary survey should also be submitted in accordance with para. D.2 following.

(*c*) **Levelling**

Levelling circuits should be closed to G.T.S. bench marks. Where open circuit levelling is unavoidable, it should be carried out on the double levelling system or alternatively two separate circuits should be made. Permanent bench marks (P.B.M., see Fig. 1) may be established at intervals of not more than five thousand (5000) ft. depending upon terrain and also at bridge sites and intersection points.

(*d*) **Profile Elevations**

These should be taken along the centerline of the route at intervals of five hundred (500) feet and every abrupt change in grade. Profiles of crossing of Railway and road intersections should be taken to five hundred (500) ft. on either side of the Road centerline, wherever there is any existing bridge or culvert, its deck level in the center should also be taken and plotted.

3. Detailed Surveys

(*a*) Within sixty (60) days of the submission of the last section of the preliminary survey, the Highway Authority should provide the Surveying Firm with drawings which should show the centerline for the detail survey and also the proposed typical cross section and R.O.W. The surveying firm should then proceed with the detail survey in accordance with the following provisions.

(*b*) **Topography**

All topography within the right of way of the road in rural areas and to fifty (50) ft. beyond the proposed R.O.W. lines in all built up areas and also within municipal limits should be located with reference to the proposed centerline. This includes mile posts and furlong posts, all built in structures, rows of trees, overhead wires, telephone lines, power, gas, water drainage and sewerage lines and embedded cables; all service and approach roads with a note as to their type of construction; drains, irrigation ditches,

places of worship, graveyards, property entrances and all buildings whether temporary or permanent. Depths of all underground utility lines below natural surface level (N.S.L.) should be recorded. The clearance to all overhead structures whether bridges or suspended cables should be recorded. The exact chainage of the start and end of each existing bridge and its local name *e.g.*, "AIK NULLAH BRIDGE", 3 spans of 35 feet each, R.C.C. T-beam and slab shall be recorded. Similarly the exact chainage of centerline of each culvert (below 20 feet overall span)

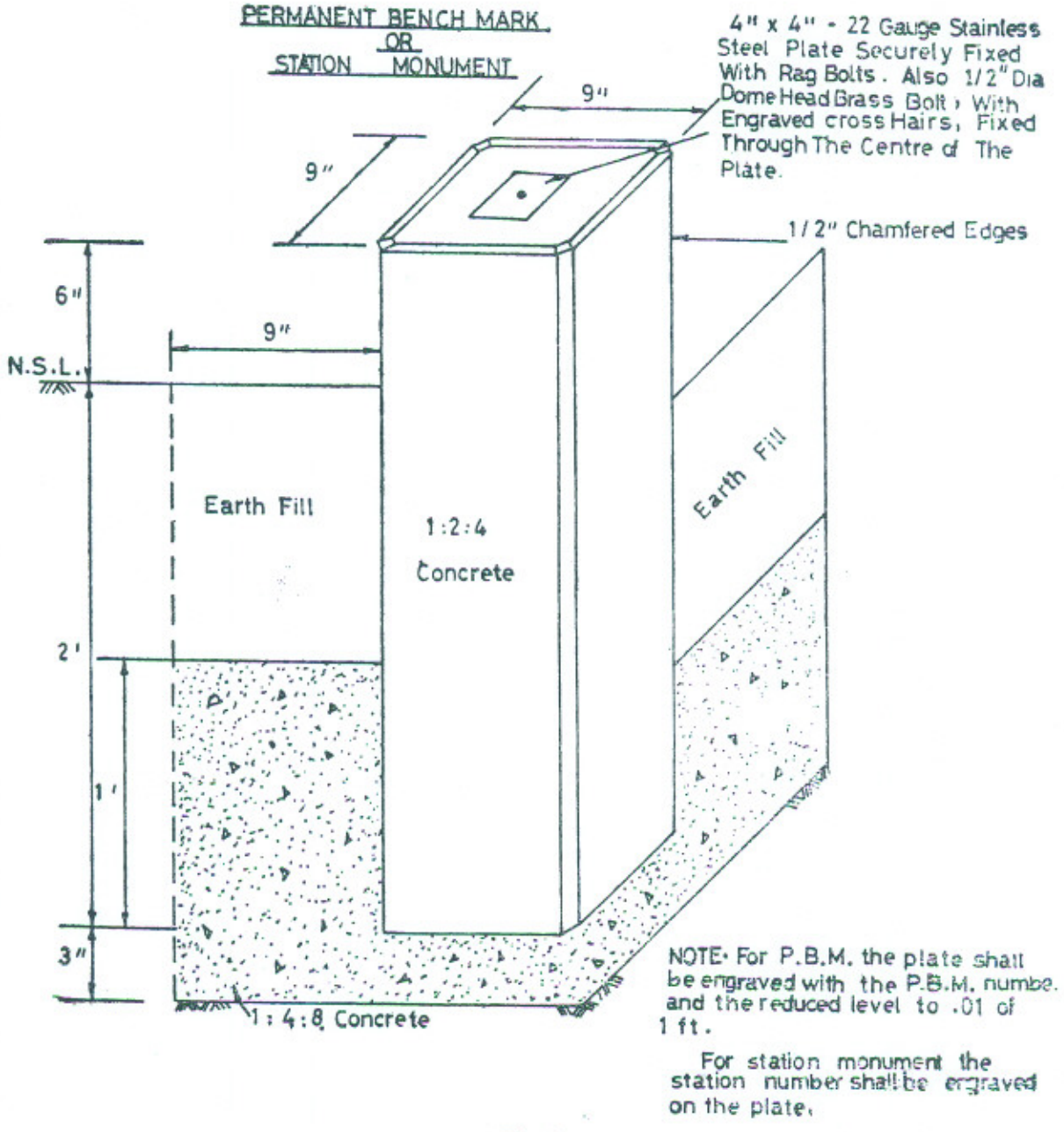

Fig. 1

water, drainage, sewerage lines and drains and ditches should be noted stating the size and type of the same. The skew angle of all structures, overhead wires, railway, road crossing irrigation and drainage ditches etc. should be noted. Topographic details should also be taken and exhibited in respect of all rail-road crossing, intersecting roads, natural and artificial drainage and irrigation ditches, depressions and rashes etc. to five hundred (500) ft. from the centerline of the road alignment in question. The Surveying Firm may be required to carry out additional topographic survey with contours (at one ft. interval for plans, two feet intervals in rolling and five feet intervals in hilly country). The rate per acre (43560) sq. ft. for this additional work should be settled with the Surveying Firm beforehand.

(*c*) **Levelling**

Levelling circuits should be close to G.T.S. bench marks. Where open circuit levelling is unavoidable, it should be carried out on the double levelling system or alternatively two separate circuits should be made. Permanent bench marks (see Fig. 1) properly located and referenced, shall be established at five thousand (5000) ft. intervals. The P.B.M. should be in position free from disturbance by construction activities and any local traffic etc. Temporary bench marks should be established at following intervals :

(*i*) In plain country at two thousand five hundred (2500) feet.

(*ii*) In rolling country at one thousand five hundred (1500) feet.

(*iii*) In hilly country at one thousand (1000) ft.

(*iv*) Close to all bridges, culverts, tunnels, intersection sites unless it is (*i*) to (*iii*) above.

(*d*) **Centerline**

The road chainage should be measured along the centerline starting with zero at the beginning of the designated mileage. Stations should be marked at five hundred (500) ft. intervals with centerline markers (see Fig. 2) and also at all P.C.'s and P.T.'s. Where these points come on any existing pavement or permanent structure, the stations and their designations should be painted neatly on the surface. Intervisible permanent stations (see Fig. 1) should be established at intervals not exceeding one

thousand (1000) feet. Permanent stations should also be established at all P.I's.

The magnetic bearing of each tangent section of centerline should be noted precisely and tied with the grid coordinate system of the Survey of Pakistan Department.

(*e*) Profile Elevations

Profile elevations should be taken along the centerline of the alignment at intervals of one hundred (100) feet and at every abrupt change in grade. Profiles of railway crossings and intersecting roads should be taken to five hundred (500) on each side of the road centerline (L-Line).

CENTERLINE MARKER

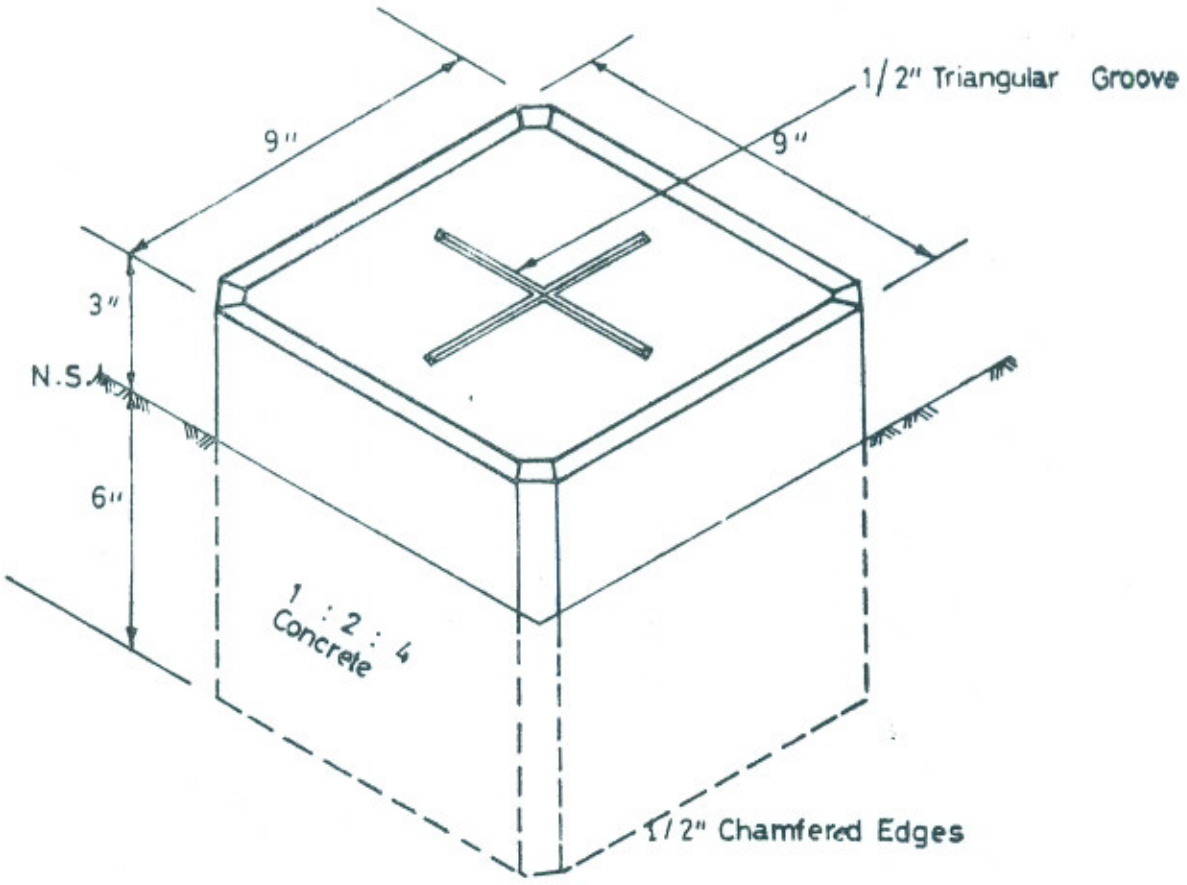

Fig. 2

(*f*) **Cross-Sections**

Cross sections should be taken at every two hundred (200) feet (even chainages) and at abrupt changes in terrain. Levels should be taken on the alignment centerline, edges of formation width (proposed or existing), R.O.W. line and at any change in grade between R.O.W. line and edge of formation. Where longitudinal drains exist, particularly in urban areas, invert levels of these drains should be recorded.

(*g*) **Bridge and Culvert sites**

(*i*) At the bridge and culvert sites surveys should include the stream plan and longitudinal profile for a minimum distance of one thousand five hundred (1500) feet each way from centerline of proposed crossing showing flood line elevations and low and high water profile if obtainable as well as channel cross sections starting at the proposed crossing point and at two hundred (200) feet intervals on each side from the centerline of each of these bridge/culverts for a total length of three thousand (3000) feet.

(*ii*) Bridge/culvert site topography should be plotted on a scale of 1 inch: twenty (20) feet horizontally and 1 inch: five (5) feet vertically.

(*iii*) For small culverts as may be specified on the final alignment plans, the above detail may not be required.

C. DRAFTING

1. General

(*a*) **Preliminary Surveys**

All preliminary surveys should be duly plotted on the standard tracing paper sheet of not less than eighty (80) g. sm. quality and submitted to the Highway Authority. The drawings should be in accordance with the sample sheets to be seen and signed by the Surveying Firm in the office of the Highway Authority. The horizontal scale should, however, be two hundred (200) ft. to one inch and the vertical scale ten (10) ft. to one inch.

(*b*) **Destailed Surveys**

All plans should be prepared in accordance with the sample plans seen and signed by the Surveying Firm in the office of the Highway Authority. The drafting medium for cross sections should be a good quality tracing paper (minimum standard 105/110 g.sm.).

Final plan and profile sheets should be of mylar, permatrace or other approved material. All drafting sheets should be completed with border and title block in ink as per sample sheet or as may be directed by the Highway Authority.

2. Location Plan

The size of the sheet should conform to the size of the plan and profile sheets and should be an ink drawing. The location plan should show cities, towns, villages and physical features such as lakes (including chhambs), streams and canals with their respective names. The road to be surveyed should be designated by a heavy solid line of substantial width. The exact mileage of various sections should be indicated. The North arrow should be placed on one side of all the sheets preferably to the right, over the title box. The map should be orientated so that the zero chainage is toward the left side of the sheet. A complete index of plan and profile sheets should be placed on the upper left side of the location plan.

The upper right side of the location plan should contain an index map of the province to a scale of 1 inch : 50 miles, with the project location outlined with a heavy black ink line.

3. Lettering

The lettering used should be as per the sample sheet (single stroke, slope of 2 to 5, inclined to the right side). Main titles should be lettered with Leroy lettering Templates No. 240 and sub titles with No. 120, all as per sample sheets. All titles and sub-titles should be underlined with the same thickness of line.

Alternative systems of lettering may be used with the approval of the Highway Authority.

4. Plan and Profile Sheets

(*a*) Four rural areas the survey should be plotted in plan to a scale of 1 inch: 100 feet and in profile to scales of 1 inch: 100 feet horizontally and 1 inch: 10 feet vertically. In urban areas (within municipal limits) the plan scale should be 1 inch: 20 feet and in profile 1 inch: 20 feet horizontally and 1 inch 2 feet vertically. In hilly areas, as may be defined by the Highway Authority, the survey should be plotted horizontally to a scale of 1 inch: 50 feet and vertically to a scale of 1 inch: 10 feet. The plan and profile sheets should be prepared in ink. The centerline should be indicated by a chain dotted line. The

centerline profile should be drawn with a light solid ink line. Levels should be indicated as on the sample sheets of the Highway Authority.

(*b*) All relevant information gathered in the field survey should be depicted on the drawings. The magnetic bearing of all tangents and the angle of deviation between them should be given. The points of intersections (P. I) of all tangents should also be given. Existing mile posts should be indicated by an arrow at right angles to the road centerline with the mile number written on. Conventional symbols to be used should be as laid down by the Highway Authority.

5. Crose Sections

(*a*) Cross sections should be drawn to a scale of 1 inch: 10 feet both horizontally and vertically. The existing cross sections should be shown as a light solid ink line with the reduced level of the centerline written underneath in pencil. The first cross section should be drawn at the bottom left hand side of the sheet proceeding upward with increasing chainage. If two rows of cross sections are to be placed on one sheet then the second row also should commence at the bottom of the sheet.

(*b*) The minimum vertical gap between cross sections should be three (3) inches center to center and a column 3 inch wide should be provided at the right hand side of each row of cross sections for quantities' data.

D. SUBMISSION OF DOCUMENTS

1. (*a*) Preliminary Surveys

The original copy of the sheets on tracing paper should be submitted to the Highway Design Engineer in charge duly signed by the authorized representative of the Surveying Firm. The first submission for the first five miles should be made within the specified number of days of the order to commence work, followed at intervals of two weeks with further submission each of five miles, or any other arrangement at the discretion of the Highway Authority.

(*b*) Detailed Surveys and Plans

One original copy of each drawing on the medium already specified above should be submitted to the Design Engineer.

The first submission for the first five miles should be made within, say, fifteen (15) days of the receipt of the final alignment plans from the Highway Authority, followed at intervals of two weeks with further submissions each of five miles.

2. All field survey books for both the preliminary and detail survey, authenticated, should be submitted to Highway Department with the drawings.

3. Prior to the submission of documents, the senior representative of the Surveying Firm should arrange with the authorised Representative of the Department to visit the project and review the drawings and should agree to make any amendments and if necessary resurvey any areas found to be in error.

E. STAKING OUT

1. After the detailed design has been done and drawings prepared by the Department, one set thereof should be made available to the Surveying Firm for taking out the central line of the alignment.

Unskilled labour and all materials other than surveying instruments should be provided by the construction contractor or the Highway Authority on behalf of the construction contractor.

Staking out should form a separate item of work and payment for the Surveying Firm and should be an optional item and may or may not be carried out through the Surveying Firm. The staking out should be done by the Surveying firm in the presence of the Representative of the Highway Authority only once, with reference to the permanent bench marks and stations established by the firm during the course of detailed survey.

2. Wooden pegs shall be placed on tangents at all P.I.'s, P.C's and P.T's and at necessary intermediate points on the tangents and curves to give clear sight between points while staking out.

II. SCOPE OF WORK FOR SURVEY AND MAPPING OF EXISTING ROADS

The scope of work should be divided into four categories :

A. General.
B. Survey.
C. Drafting.
D. Submission of documents.

A. GENERAL

1. The purpose of this contract is to provide the Highway Authority with sufficient information data and detailed drawings necessary to facilitate the design of the highway/road.

2. The work of the surveying firm should be checked, without prior notice, by the authorized representative of the Highway Authority. The surveying firm should cooperate with the representative and make available all information in the field or the office, as may be directed, to satisfy the Highway Authority that the work is being carried out correctly and in accordance with the provisions laid down herein.

3. The survey and the submitted drawings should include an additional distance of two thousand and five hundred (2500) ft. beyond each end of the specified mileage or points on the indicated alignment so that intersections and passing sight distances etc., could be properly designed.

4. The accuracy of the detailed surveying should be to the following standards (third order of accuracy):

(*i*) Linear measurements : 1 : 3000

(*ii*) Theodolite readings : to the nearest second with the average of three (3) readings at each station being recorded.

(*iii*) Levelling : The maximum allowable closing error in level circuits shall be $.05 \times \sqrt{\text{number of miles in feet.}}$

5. The payment for surveying and mapping as per this scope of work should be made for each mile or part thereof of the designated mileage, measured along the centerline of the existing road at the rate agreed upon. No additional payment should be made for work done under Item A.3 above. Payment should be subject to satisfactory completion of the work.

B. SURVEY

1. A sufficiently detailed and accurate survey is essential to be carried out to permit proper engineer drawings to be prepared.

2. Base-line

A base-line should be established by theodolite traverse outside the pavement at a suitable distance from the centerline of the road, to avoid disturbances from the traffic. Stations at approximately five-mile intervals should be permanent monuments (see Fig. 1) and should be thoroughly referenced to existing permanent points on the ground or to additional permanent markers specifically fixed for the purpose. Intermediate stations may be staked. The initial leg of the traverse should be related to the magnetic meridian and also intermediate legs at intervals of approx. 5 miles. All mile posts and R.O.W. monuments should be accurately tied into the base line. The base-line shall be referenced, wherever possible, to becons and monuments of the National Survey of Pakistan.

3. Topography

All topography within 150 ft. of either side of the centerline of the road in rural areas and to fifty (50) feet beyond the R.O.W. line in municipal limits should be located with reference to the base-line. This includes mile posts and furlong posts; all built-in structures, rows of trees, overhead wires, telephone lines, power, gas, water, drainage and sewerage lines and embedded cables; all service and approach roads with a note as to their type of construction; drains, irrigation ditches, places of worship, graveyards, property entrances and all buildings whether temporary or permanent. Depths of all underground utility lines below natural surface level (N.S.L.) should be recorded. The clearance to all overhead structures whether bridges or suspended cables should be recorded. The exact chainage of the start and end of each existing bridge (above 20 feet span) shall be noted together with the type of bridge and its local name, *e.g.* "Aik Nullah Bridge", 3 spans of 35 feet each, R.C.C. T-beam and slab. Similarly the exact chainage of the centerline of each culvert (below 20 feet overall span), water, drainage, sewerage lines and drains and ditches shall be noted stating the size and type of the same. The skew angle of all structures, overhead wires, railway, road crossings, irrigation and drainage ditches etc., shall also be noted. Topographic details shall also be taken and exhibited in respect of all rail-road crossings, intersecting roads natural and artificial drainage and irrigation ditches, depressions and rashes etc., to five hundred (500) ft. from the centerline of the pavement.

4. Levelling

Levelling circuits should be closed, wherever possible, to G.T.S. bench marks. Where open circuit levelling is unavoidable, it should be carried out on the double levelling system or alternatively two separate circuitet should be made. Permanent bench marks, properly located and referenced, should be established at 5-mile intervals—the 5-mile station monuments may be used for this purpose. Temporary bench marks shall be established at intervals of one mile. The highest point of the mile posts may be used for this purpose, provided the same are securely fixed, otherwise any nearest permanent structure should be used with proper reference description.

5. Centerline

The centerline of the existing pavement shall be accurately located by offset to the base-line. The road chainage should be measured along this centerline starting with zero at beginning of survey and should be accurately referenced to the base-line at intervals not exceeding two thousand (2000) ft. Every two hundred (200) ft. station should be marked on the pavement surface

with a paint stripe and numbered in addition to a steel nail driven into the earthen berm. The magnetic bearing of each trangent section of centerline should be noted.

6. Profile Elevations

Profile elevations should be taken along the centerline of the pavement at intervals of one hundred (100) ft. and at every abrupt change in grade. Profiles of railway crossings and intersecting roads should be taken to five hundred (500) ft. on each side of the road centerline. Wherever the carriage-way is divided, profiles shall be taken on the median edge of both pavements.

7. Cross-Sections

Cross sections should be taken at every two hundred (200) ft. (even chainages) and at abrupt changes in terrain. Levels should be taken on the pavement centerline, edges of pavement, edge of shoulder, toe of file slopes, top of the cut slope, R.O.W. line and at any change in grade between R.O.W. line and toe of slope, or top of the cut section. Where longitudinal drains exist, particularly in urban area, invert levels of these drains should be taken. Where the degree of curvature of the centerline is more than fifteen (15) minutes (or radius of curvature is less than 22918 ft.) cross sections should be taken at 25 ft. intervals within the formation width to be able to check and design the super elevations on curves.

C. DRAFTING

1. General

All plans should be prepared in accordance with the sample plans seen and signed by the Surveying Firm in the office of the Highway Authority. The drafting medium should be a permanent reproducible stable material of approved quality such as mylar permatrace or other approved material. All drafting sheets should be completed with border and title block in ink as per samples or as may be directed by the Highway Authority.

2. Location Plan

This sheet should be on a permanent drafting medium such as cloth of mylar or permatrace and should be an ink drawing. The size of the sheet should conform to the size of the plan and profile sheets. This plan should contain an index map of the area to a scale of 1/2″=1 mile or 1″=1 mile as may be convenient. Cities, towns, villages and physical features such as lakes, streams and canals must be indicated with their respective names. The road under survey should be designated by a heavy solid line of substantial width. The exact mileage of various sections should be indicated. The North arrow

should be placed on one side of all the sheets, preferably to the right over the title box. The map should be orientated so that the North arrow is toward the top of the sheet or to the right. A complete index of plan and profile sheets should be placed on the upper left side of the location plan.

3. Lettering

The lettering used should be as per the sample sheet approved by the Highway Authority (single stroke, slope of 2 to 5, inclined to the right side should be preferred). Main titles should be lettered with Leroy Lettering Templates No. 240 and sub-titles with No. 120. All titles and sub-titles should be underlined with the same thickness of line. Alternative systems of lettering may be used with the approval of the Highway Authority.

4. Plan and Profile Sheets

(*a*) For rural areas the survey should be plotted in plan to a scale of 1″=100 ft. and in profile to scales 1″=100 ft. horizontally and 1″=10 ft. vertically. In urban areas (within municipal limits) the plan scale should be 1″..20 ft. and in profile 1″=20 ft. horizontally and 1″=2 ft. vertically. The plan should be prepared with H pencil only. The centerline of the existing pavement is advisable to be indicated by a chain dotted line and the pavement edges by a small dashed line. The centerline profile should be drawn with a light solid ink line, and along this profile should be drawn the profile of the natural surface level NSL (the lower of the right or left toe elevations or higher of the right or left cut top elevations), writing down the elevations along such profiles at every hundred (100 ft.) and abrupt changes of terrain.

(*b*) All relevant information gathered in the field surveys should be depicted on the drawings. The base-line need not be shown but stations should be indicated. The magnetic bearing of all tangents and the angle of deviation between them should be given. The radius of curvature of all curves should also be given with as much curve data as possible to be ascertained. Mile posts should be indicated by an arrow at right angles to the road centerline with the mile number written on.

C. Conventional symbols to be used should be indicated to the Surveying Firm by the Highway Authority.

5. Cross Sections

(*a*) Cross sections should be drawn to a scale of 1″=10′ both horizontally and vertically. The existing cross section should be shown as a light solid ink line with the reduced level of the centerline of the pavement written underneath in pencil. The first cross section should be drawn at the bottom left hand side of the sheet proceeding upwards with increasing chainage. If two rows of cross sections are to be placed on one sheet then the second row should also commence at the bottom of the sheet.

(*b*) The minimum vertical gap between cross sections should be three inches center to center and a column 3″ wide should be provided at the right hand side of each row of cross sections for Quantities Data.

D. SUBMISSION OF DOCUMENTS

1. One original copy of each drawing on reproducible medium should be submitted to the Highway Authority. The Surveying Firm should be advised to draw out a work programme to ensure regular submission of the mapped surveys to the Highway Authority with a view to facilitating their check and accomplishing the design of the road in a consistent and smooth fashion.

2. All field survey books, fully authenticated, should be submitted by the Surveying Firm with the drawings, to the Highway Authority for facility of references and record.

3. Prior to the submission of documents, the senior representative of the surveying firm should arrange with the authorised Representative of the Highway Authority to visit the project and review the drawings and should agree to make any amendments and if necessary resurvey any areas found to be in error.